# STORTH

EXPERTS IN SLURRY MANAGEMENT

SEPARATE IT

# Separating Systems

Specialist Manufacturers of slurry handling equipment

Storth has used its experience of slurry management and extensive market research to develop the best solution for your slurry separating needs

STORTH
Stoneleigh Park, Station Road,
Holme, Nr Carnforth, Lancashire, LA6 1HR.

Tel: +44 1524 781 900
Email: sales@storthmachinery.co.uk

Manufactured in the UK

www.storthmachinery.co.uk

# Separating Slurry

Managing slurry is becoming an increasingly important focus for all livestock farms to optimise the use of nutrients for crop and grass production and to protect the environment from air and water pollution. Separating assists farmer compliance with regulations for storing, covering stores and applying slurry as proposed in Defra's Clean Air Strategy.

## Key Points of Separating

- Increase storage capacity by 15-25%
- Ease of slurry handling, pumping & mixing
- Ability to manage application & nutrient levels
- Liquid fracture is the main source of Nitrogen
- Improved Nitrogen infiltration to the soil & reduced leaf contamination
- Increased application periods due to reduced leaf contamination
- Stackable & simple to store solid material
- Solid material holds the larger proportion of Phosphate & Potash
- Improved nutrient management

# Storth EYS Screw Press Separator

Storth-EYS screw press separators are designed to mechanically separate farmyard slurry which contains fibrous structure such as cow or pig manure.

The Storth-EYS screw presses are known for their unsurpassed separation efficiency - combination of high throughput and drier separated solids. We achieve these results by attention to detail in both design and manufacturing.

Our robust design handles all types of livestock manure and biogas digestate with ease, yielding a high output of drier solids and a liquid fraction containing only minimal amounts of suspended solids.

Heavy-Duty Gearbox

Exceptionally long life of the screen and auger

EYS Discharge Mechanism

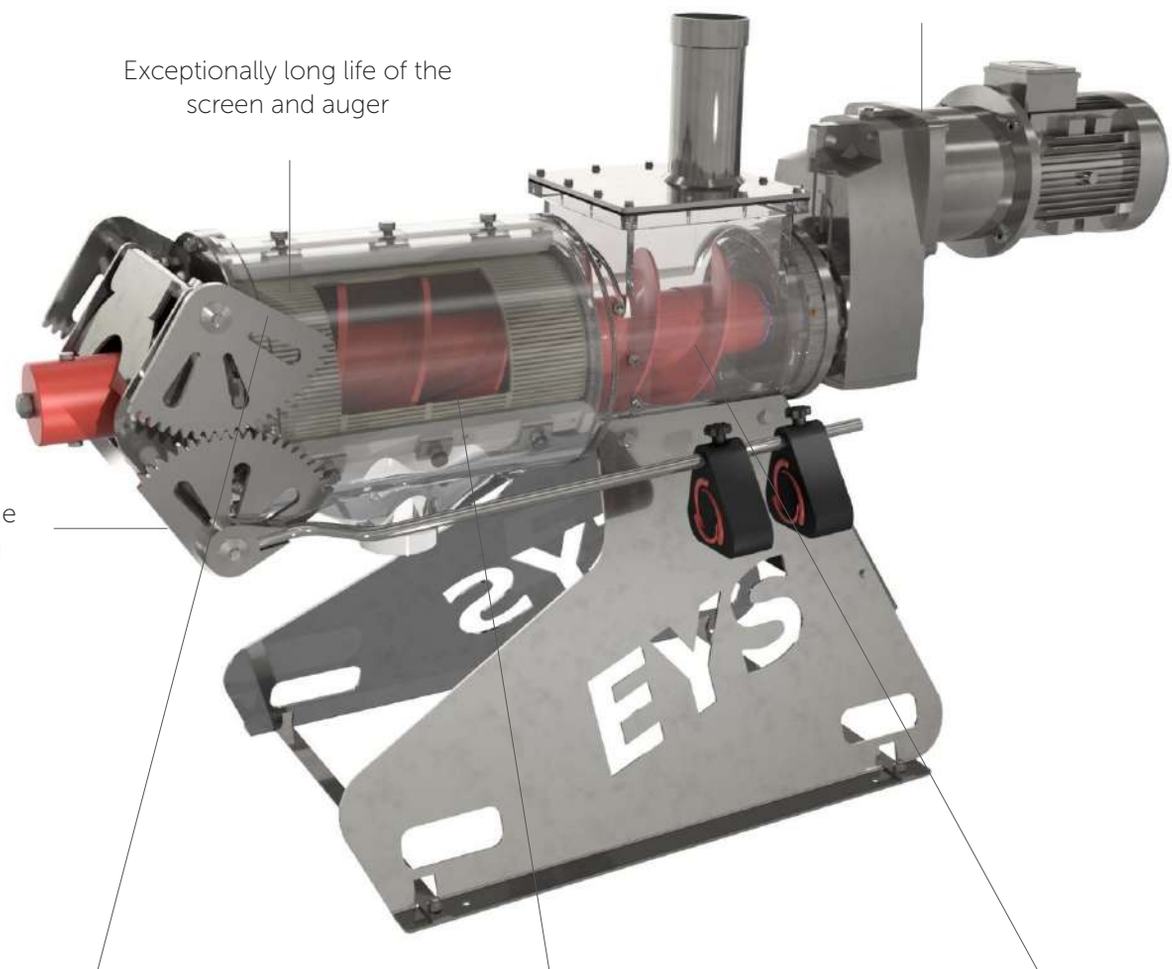


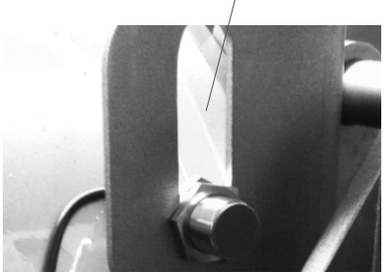

Optional Plug Sensor to control solid plug

Observation hatch to see inside the Separator

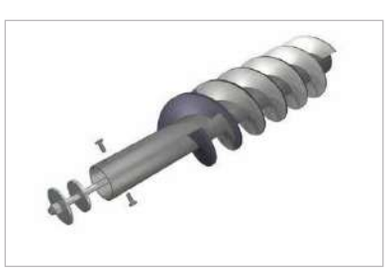

Easy installation of the Screw and Screen

# Benefits of the Storth EYS Screw Press Separator

- Turn key installation
- High performance gearbox
- Minimal wear components
- Tungsten face hardened screw
- Stainless steel screen
- Screens available to suit different applications
- Simple mechanical weights for dry matter adjustment
- Low maintenance
- 30 years of separator experience

Storth offer both standard and bedding models of screw presses. The standard models are designed for traditional separation needs, offering drip-free solids at high capacity and the benefits you expect from common separation applications. However, the bedding models which are known as Heavy Duty (HD) feature specific design parameters to achieve the driest solids possible for the most demanding separation applications. HD separators are equipped with extra heavy-duty screens, augers and gearboxes.

# Separating Systems

With over 30 years' experience with slurry systems, Storth have worked together with our partner EYS, manufacturer of the Separators, to provide full turn key installations to suit every farmer's requirement.

## Installation

Storth provide a full turn-key installation programme to suit each farm requirement. We manufacture, supply and install all ancillary equipment. This includes concrete tanks, mixers, pumps, control panels, gantries and pipework. This is a major benefit when it comes to project planning, advice, management, responsibility and aftercare support.

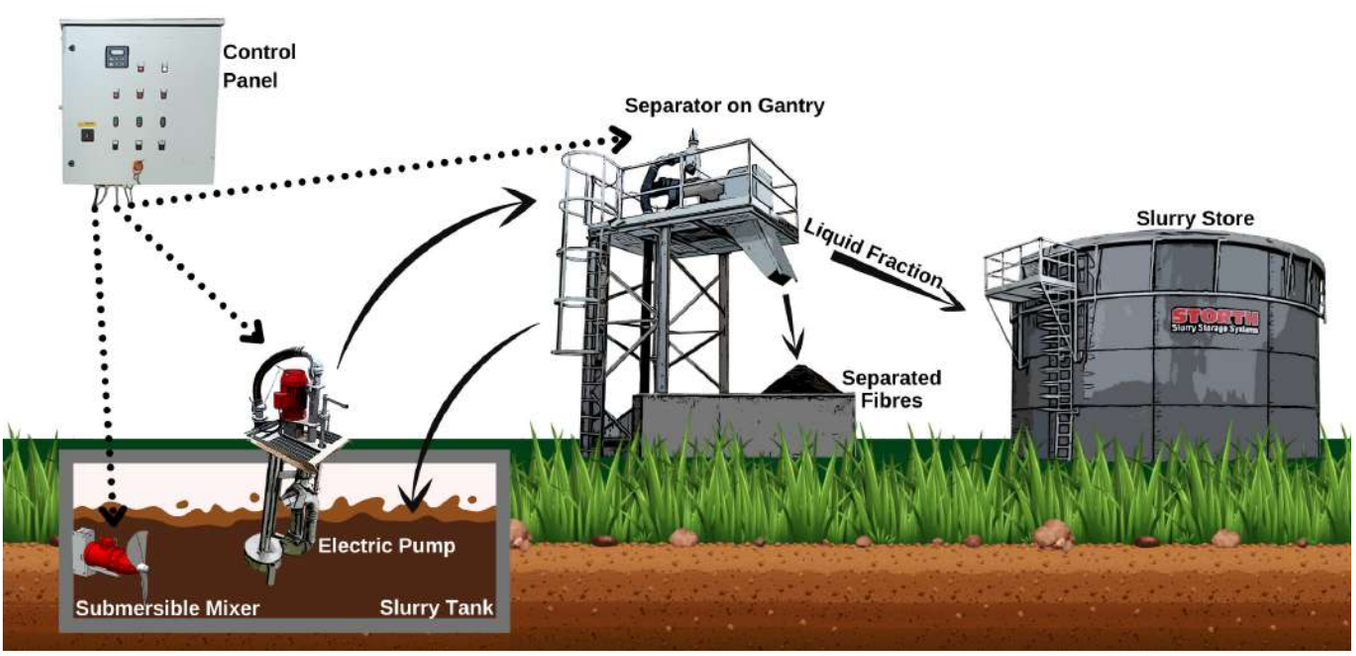

# Control Panels

The Storth control panels can operate the separator system manually or more popularly automatically. Automation can be based on either time or slurry level.

Separator control panels can be individually programmed to suit each farm system and slurry type, sequencing the mixer, pump and separator engagement.

Pre-set for regularly cleaning the sieves, periodically the auger is run in reverse for a short period of time. This prevents damage to the gearbox due to any unexpected blockages inside the machine left over from the previous run. It also helps clean the inside surface of the screen; the cleaner the screen, the better the separator's performance.

Panels are IP55 rated for weather resistance, are of robust construction and easily mounted onto walls or via various floor mounting options.

# Mixers

To achieve efficient separation, it is beneficial to present separators with a consistent Dry Matter (DM) slurry. Therefore prior to engaging the separator, slurry is often pre-mixed. Storth can achieve this in a few individual ways with long shaft surface mounted mixers, submersible mixers or long shaft pumps in mixing mode, all of which are 3 phase electrically powered.

In addition to mechanical mixing, Storth employ a slurry recirculation system as part of the separator intake to create agitation, a technique which often eliminates the requirement for mechanical mixing altogether.

# Pumps

5.5kW to 22kW pumps are available in a range of formats to suit specific farm requirements. The most popular is Storth's own long shaft "Superjet" pump. However, certain sites may be more suitable for the Storth-EYS submersible pump or even piston pump.

Used in conjunction with our recirculation pipe system, the chosen feed pump will run continuously giving additional slurry source agitation. This provides a simple control system and reduces motor fatigue when compared with systems which continually switch on/off as per separator demand.

# Gantries

Manufactured to British Standard 5502, Storth platform & gantries meet the required safety levels ensuring operator security and meet insurance standards. Robustly built and fully galvanised gantries are available in heights from 3m (10') to 6m (20') with standard side discharge or drive through options. Each is supplied constructed with a secure access ladder and safety rails.

Alternatively, if customers wish to erect their own building or concrete gantry structure, Storth offer the galvanised platform base as a stand-alone option.

# Pipework

Storth consider the complete system when thinking about separators, the transfer and flow of slurry is a critical part of this and can make or break a separators operation. A combination of 125mm (5") and 160mm (6") 10 Bar rated PVC pipe fixings are used to feed, overflow return, and transfer separated liquid. Where possible solid pipework is used to ensure long term, low maintenance, trouble free operation. Supplied in a range of kit distances from 10-25m these simplify the purchase and give best installation efficiency.

At the heart of the Storth pipework system is a unique "Top Box" which sits on top of the separator and acts as an agitated feed reservoir complete with overflow. Simple as this box appears it has been developed over several years to provide zero back pressure with best separator supply and virtually guarantees efficiency.

# FarmerPlus Mobile Separator

Storth's entry level plug and play separator is the FarmerPlus Mobile, it has been designed as a simple solution for farmers requiring separation of slurry at multiple sites or at different tanks on one site.

The main frame is constructed of robust 100mm x 100mm x 5mm box, stands with a compact foot print of 2.6m x 2.1m and is fully galvanised for durability. Once on-site frame erection is up, it takes around 10 minutes using a handler and two operators, with breakdown taking a similar time. The FarmerPlus mobile separator is no slouch.

Powered using 3 phase electric Storth's control panel offers the same tested functionality as all of our standard separators, the only difference is that power is connected via a 4 pin 63Amp connector male/female plug & play socket.

Storth keep things as flexible as possible with the choice of long shaft, submersible or Positive Displacement (PD) feed pumps. A stone trap is incorporated into models where longer distances require the PD pump, this avoids potential damage and breakdown. In general, the proven Storth long shaft pumps are the most popular due to their simplicity and external slurry electrical motor operation. In all cases the skid unit has pump storage capability for mobile transportation.

With separator capacities from 6-30 $m^3$/hr (cow slurry), 12-52$m^3$/hr (pig slurry) customers can choose from the SP/400, 600, 800 or 1100 standard models. All incorporate the unique "Top Box" feed system and overflow pipework to improve agitation. Slurry is transferred throughout the machine via quick release Bauer fitted long life UV protected Vacupress hoses.

By mounting the separator 3m high, Storth have achieved an advantage over their competition. Solid material is stackable at heights up to 3.0m, and with a discharge height of 3.3m the separated liquid can potentially be fed to its final storage destination without the requirement of an additional pump. For those with longer distances to final storage a Storth-EYS dry run pump is employed, without requirement for additional hoppers-switches or complication this pump simply assists the liquid on its travels.

Simple, strong and versatile, this Mobile Separator offers a no-frills system for farms looking to enter the market.

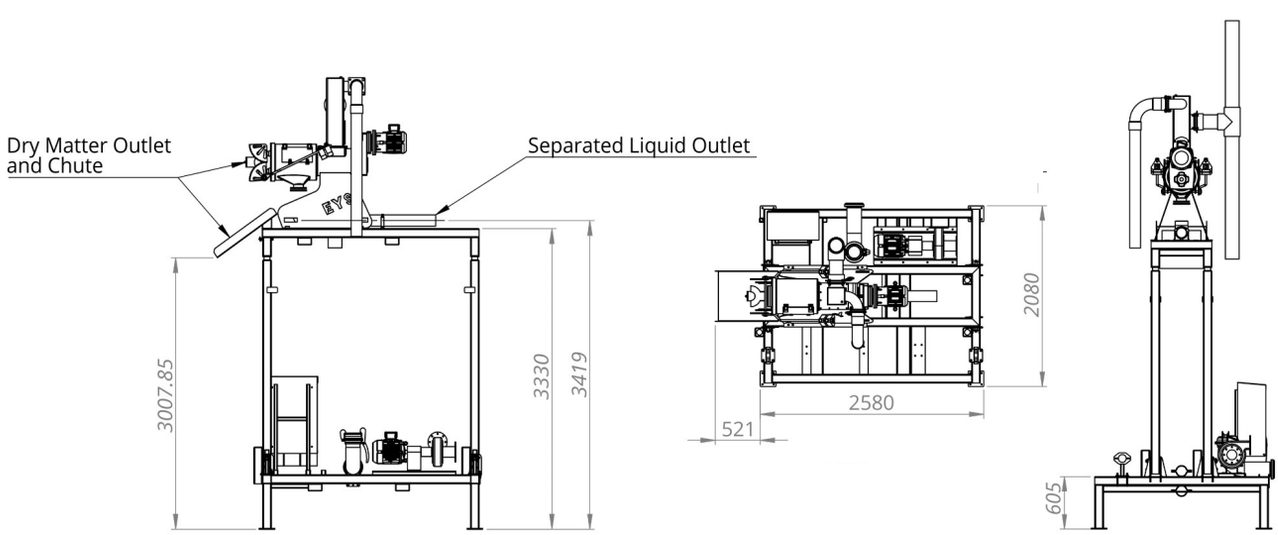

# Contractor Mobile Separator

Despite its compact size, the Contractor Mobile Separator contains all the components necessary for an efficient separation. This unit is capable of even the most demanding separation tasks, whenever and wherever you want. Simply drive around on a trailer and separate on demand, slurry separation has never been this simple and effortless.

Owners do not worry about how to feed the separators with slurry thanks to a built-in self-priming Positive Displacement (PD) feeding pump. All you need to do is connect a hose between the Contractor Separator and your slurry reception pit. Storth have thought of everything with a stone trap to catch foreign objects which could damage or block your system, all you need to do is clean this out.

In addition to the feed pump there is an output dry run pump to send the separated liquid on its way. With its specially designed chassis and Storz piping interface, it is easy to assemble and disassemble the Contractor Mobile Separator in minutes.

Separated solids slip down a stainless-steel chute directly to the discharge conveyor, all open & free from complexities this system prevents material bridging and headaches. The conveyor can be opened or closed easily by hand and locked by the hinges, it comes with a hand pump to adjust working height.

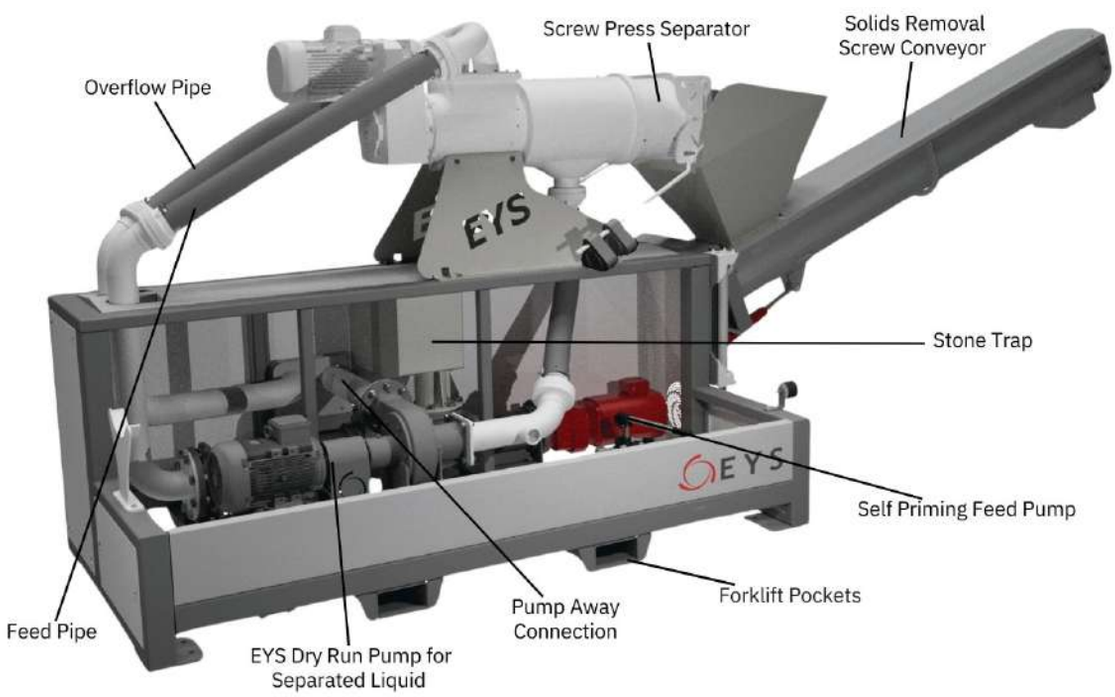

# Separator Technical Information

| | 400/400A | 600/600A<br>ST/MOBISEP-600<br>ST/MOBISEP-600A<br>EYS/SEP2GO-600<br>EYS/SEP2GO-600A | 800/800A<br>ST/MOBISEP-800<br>ST/MOBISEP-800A<br>EYS/SEP2GO-800<br>EYS/SEP2GO-800A | 1100/1100A<br>ST/MOBISEP-1100<br>ST/MOBISEP-1100A<br>EYS/SEP2GO-1100<br>EYS/SEP2GO-1100A |
|---|---|---|---|---|
| **Power (Separator Only)** | 2.2 kw | 5.5kW | 5.5kW | 7.5kW |
| **Dry Matter** | 25%-30% | 25-30% | 25-30% | 25-30% |
| **Cow** | **400/400A** | **600/600A** | **800/800A** | **1100/1100A** |
| **Output Capacity Based On Cow Slurry 6-9 % DM** | 1320 gal/hr ($6m^3$/hr) | 2640 gal/hr ($12m^3$/hr) | 3959 gal/hr ($18m^3$/hr) | 6600 gal/hr ($30m^3$/hr) |
| **Output Capacity Approx Cow No's** | 85 per hour | 170 per hour | 260 per hour | 430 per hour |
| **Estimated Cow Slurry Production 15 gal/day ($0.07m^3$ /day)** | | | | |
| **Pig** | **400/400A** | **600/600A** | **800/800A** | **1100/1100A** |
| **Output Capacity Based On Pig Slurry 3-6 % DM** | 2640 gal/hr ($12m^3$/hr) | 8800 gal/hr ($40m^3$/hr) | 10118 gal/hr (46 $m^3$/hr) | 11440 gal/hr (52 $m^3$/hr) |
| **Output Capacity Approx Pig No's** | 2000 per hour | 6665 per hour | 7665 per hour | 8665 per hour |
| **Estimated Pig Slurry Production 1.3 gal/day ($0.006m^3$ /day)** | | | | |

# HD Separator Technical Information

| | 600HD<br>EYS/SEP2GO-600HD | 800HD<br>EYS/SEP2GO-800HD | 1100HD<br>EYS/SEP2GO-1100HD |
|---|---|---|---|
| **Power (Separator Only)** | 5.5kW | 11kW | 11W |
| **Dry Matter** | 35-40% | 35-40% | 35-40% |
| **Cow** | **600HD** | **800HD** | **1100HD** |
| **Output Capacity Based On Cow Slurry 6-9 % DM** | 2200 gal/hr ($10m^3$/hr) | 3300 gal/hr ($15m^3$/hr) | 4400 gal/hr ($20m^3$/hr) |
| **Output Capacity Approx Cow No's** | 145 per hour | 215 per hour | 285 per hour |
| **Estimated Cow Slurry Production 15 gal/day ($0.07m^3$ /day)** | | | |
| **Pig** | **600HD** | **800HD** | **1100HD** |
| **Output Capacity Based On Pig Slurry 3-6 % DM** | 4000 gal/hr ($18m^3$/hr) | 6600 gal/hr ($30m^3$/hr) | 8800 gal/hr ($40m^3$/hr) |
| **Output Capacity Approx Pig No's** | 3000 per hour | 5000 per hour | 6600 per hour |
| **Estimated Pig Slurry Production 1.3 gal/day ($0.006m^3$ /day)** | | | |

## SCRAPE IT

## PUMP IT

## SEPARATE IT

## STORE IT

## MIX IT

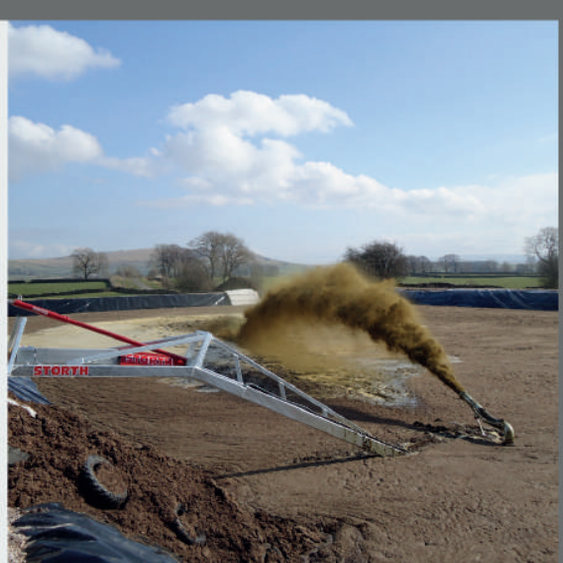


## APPLY IT

# STORTH
EXPERTS IN SLURRY MANAGEMENT

**For additional information and advice please contact your Storth representative**

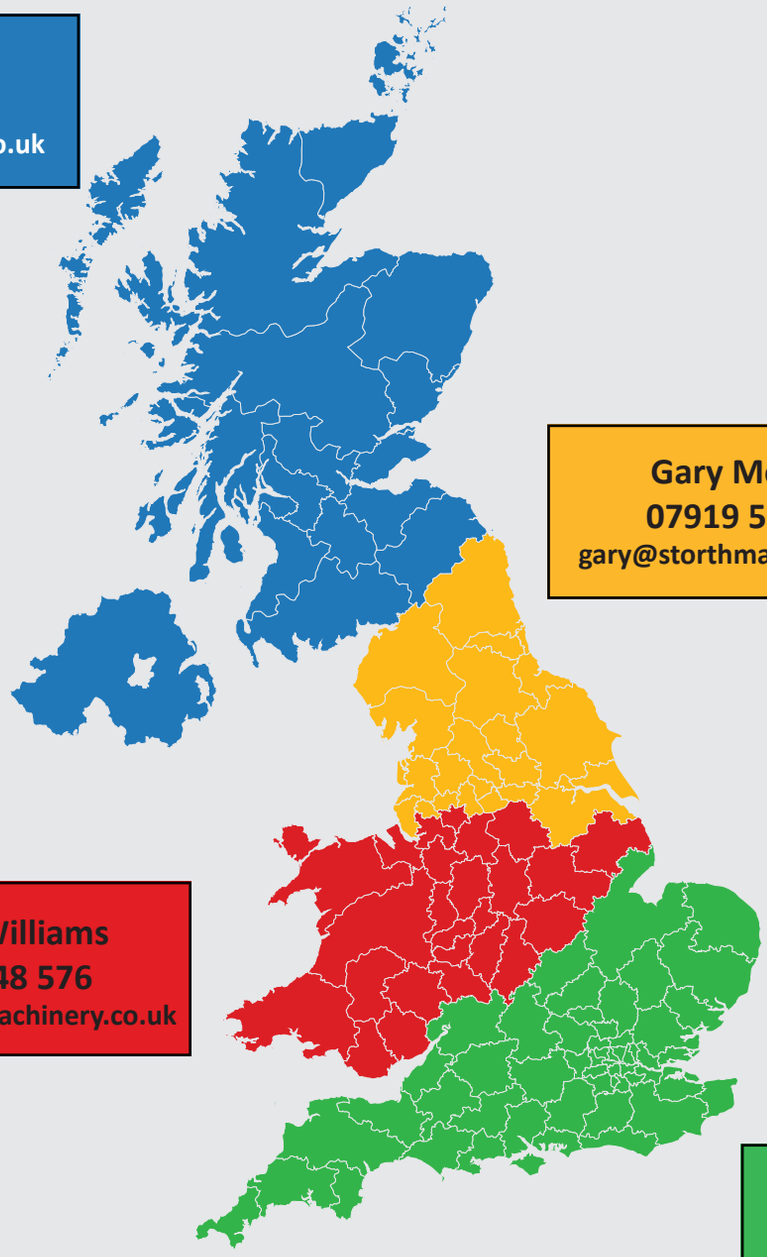

**Neil Robinson**
**07393 149598**
neil@storthmachinery.co.uk

**Gary Morland**
**07919 563 796**
gary@storthmachinery.co.uk

**Geraint Williams**
**07464 548 576**
geraint@storthmachinery.co.uk

**Neil Robinson**
**07818 053 159**
neil@storthmachinery.co.uk


STORTH
EXPERTS IN SLURRY MANAGEMENT

Stoneleigh Park, Station Road,
Holme, Nr Carnforth, Lancashire, LA6 1HR.

Manufactured in the UK

Tel: +44 1524 781 900
Email: sales@storthmachinery.co.uk


**Global Sales**
**Julian Lopez**
**+44 (0) 7384 258 916**
export@storthmachinery.co.uk

www.storthmachinery.co.uk

V2410