CASE STUDY: GENERATOR AND TRANSFORMER PROTECTION

HARDWARE-IN-THE-LOOP TESTING OF GENERATOR AND TRANSFORMER PROTECTION AT BC HYDRO

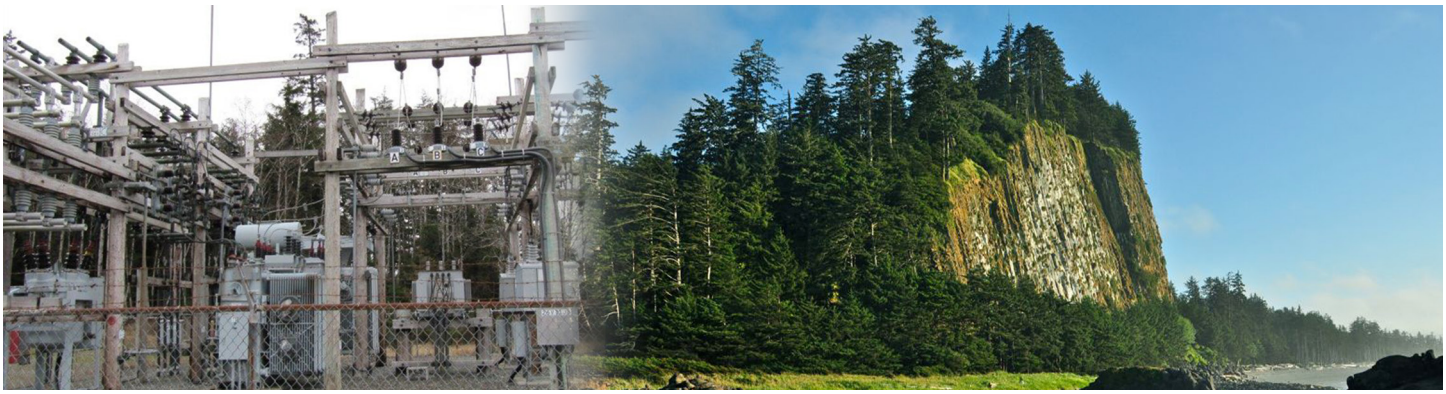

USER PROFILE: CUTTING-EDGE POWER SYSTEM TECHNOLOGY AT THE EDGE OF THE WORLD

BC Hydro is the third-largest utility in Canada with major hydro-electric generation assets in the northern Peace and southeastern Columbia regions of the province. The generation is far from the bulk of the demand located in the Vancouver area in the south-west corner. The main transmission system consists of long 500 kV lines. BC Hydro serves over 95% of the province's population, with a service area stretching from the U.S. border to the 59th parallel — over 1,300 km north. This area is uniquely diverse in terms of geography, culture, and power system infrastructure, including many remote communities.

As a leading utility, BC Hydro continually assesses the security and reliability of their power system protection and control. Their RTDS® Simulator, a powerful NovaCor processing unit with both conventional and communications-based I/O options, has supported their efforts in upgrading protection on 500 kV lines. This case study focuses on recent work in upgrading generator and transformer protection. Recent transformer protection upgrades took place at Masset substation, where diesel generators serve a thriving community on the remote, wild, and beautiful islands of Haida Gwaii — the traditional territory of the Haida Nation.

Installation of skidmount transformers at BC Hydro's remote Masset substation on Haida Gwaii. Transformer protection was tested with the RTDS Simulator.

PROJECT FOCUS: IMPROVING THE RELAY TESTING PROCEDURE AND REDUCING COMMISSIONING TIME

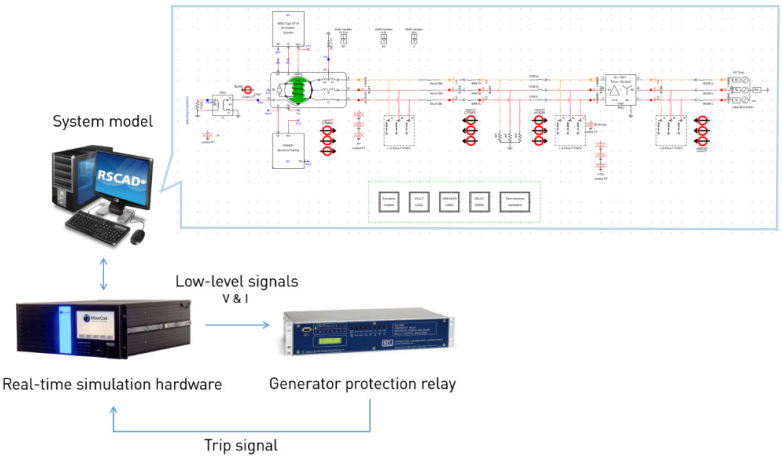

Historically, BC Hydro has tested generator protection using relay test sets (open-loop testing tools) and steady-state signals. However, the dynamics of the generator, governor, and exciter are not captured using this method. Transitioning the testing to the real-time simulation environment allows for the detailed dynamic representation of the network, the machine, and its controls. The new closed-loop testing process also supports the commissioning process and operations. Functions tested with the RTDS Simulator include:

Generator protection

- Stator ground fault
- Out-of-step
- Loss of excitation
- Differential

Transformer protection

- Instantaneous & time overcurrent
- Overvoltage
- Differential

Examples of protection challenges addressed by BC Hydro via real-time simulation and HIL testing

Generator protection misoperation:

A diesel generator was tripping on the differential element due to severe CT saturation on transformer energization. A supervised differential blocking scheme and the relay's High-Security-Mode (HSM) were tested on the RTDS Simulator to solve the issue.

Transformer protection misoperation:

An already energized transformer was saturating during the energization of another transformer. This is known as sympathetic inrush and the sympathetic transformer inrush resulted in the mis-operation of the differential element of a relay protecting the two transformers. Engineers reversed the polarity of one set of transformer CTs and tested the successful modification on the RTDS Simulator.

MODELLING AND VALIDATION: GOOD ENGINEERING FOSTERS TRUSTED RESULTS

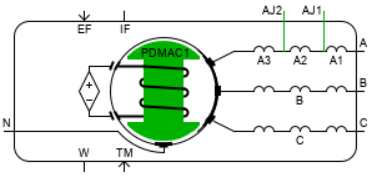

Phase domain synchronous machine (PSDM) model: The RTDS Simulator's RSCAD® software has several machine models available, including the PDSM used by BC Hydro for their generator protection testing. This special PDSM model, designed for testing stator-ground fault protection, allows the user to simulate turn-turn, phase-phase, phase-ground, and field winding faults.

Validation: Accurate real-time simulation results — and in turn, dependable hardware-in-the-loop tests — depend on good data. Here, BC Hydro validates results from the RTDS® Simulator against those from an established non-real-time system model, as well as real field measurements.

This simulation seeks to replicate results from a historical system event — failure of a high-voltage line reactor. Plots show currents on the 500 kV line, which connects a hydroelectric dam to a major substation.

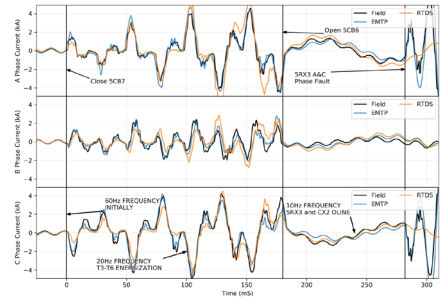

OUTCOMES: MOVING FORWARD WITH RESULTS

Having successfully applied the RTDS Simulator in their protection planning department, BC Hydro will continue testing every protection element in a controlled laboratory environment prior to generator and transformer relay deployment. During commissioning, selected COMTRADE event files are played back to the relay, and field results are sent to the protection engineer for analysis and approval.

Real-time simulation provides BC Hydro's engineers with a fast, flexible way to understand various power system contingencies and their effect on protective relays — and a testbed for validating modified settings and configurations.

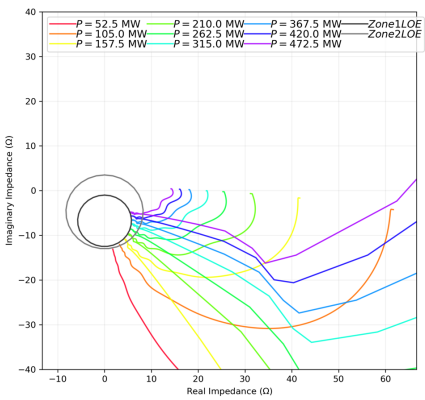

Simulation results for batch testing of Loss of Excitation protection for a range of generator loadings.

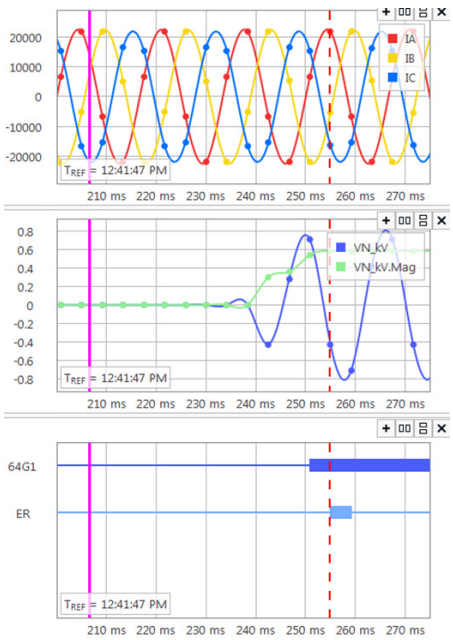

Simulation results for testing a stator-ground fault applied at 5% of the stator winding. The RTDS Simulator's machine models can be used for the closed-loop testing of 100% stator-ground fault protection.

LEARN MORE ABOUT HIL TESTING FOR GENERATOR AND TRANSFORMER PROTECTION AT RTDS.COM/APPLICATIONS

150 Innovation Drive, Winnipeg, Canada R3T 2E1 • + 1 204-989-9700

YOUR WORLD IN REAL TIME.
RTDS.COM