SCANDIVAC

PACKING ALL

TRAYSEALING MACHINE TSS



SEMI AUTOMATIC TRAY SEALING MACHINE - TSS



Machine of this series is the best solution for the growing small manufacturers with limited production area.
This traysealing machine can be used to pack wide range of products in food industry like meat, fish, dairy products, vegetables and other.
By using tested technologies and electronical and pneumatic spare parts of European well known manufacturers, traysealing machines provide safe, precise and stable work during many years of operation.

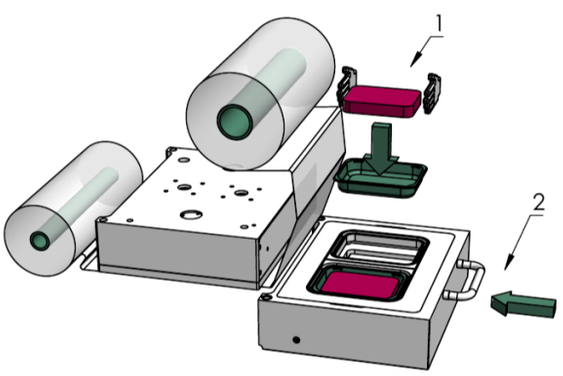

1. Empty preformed trays are placed inside the machine and filled with the product
2. The traysealer drawer moves in and the sealing process is happening. If necessary, the product can be sealed in vacuum, protective gas or SKIN
3. After the sealing the traysealer drawer moves out automatically
4. Sealed trays lifts up slightly and are ready to be removed

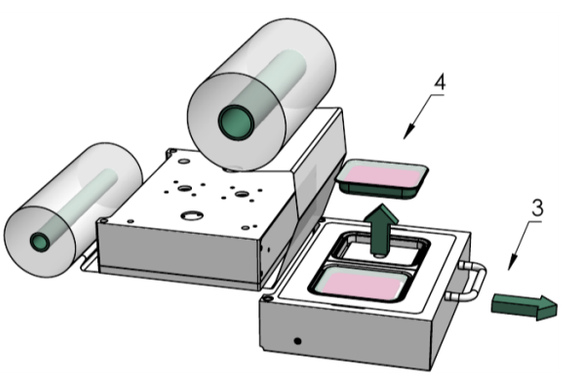

TECHNICAL DATA

SPECIFICATION
- Precise film infeed using an encoder
- Automatic drawer shuffle
- Sterile design equipment in stainless steel construction
- Most of the spare parts are freely available on the market

CONTROL SYSTEM
- Colourful LCD touch screen
- Control elements from SMC Pneumatics, Schneider Electric, Busch, Festo and others

FORMAT SIZES FOR STANDARD VERSION
- 1x1 (1 tray) Max. tray size (mm) – 434x307x100
- 1x2 (2 trays) Max. size of one tray (mm) – 434x140x100
- 2x1 (2 trays) Max. size of one tray (mm) – 202x307x100
- 2x2 (4 trays) Max. size of one tray (mm) – 202x140x100
- 3x1 (3 trays) Max. size of one tray (mm) – 118x307x100
- 3x2 (6 trays) Max. size of one tray (mm) – 118x140x100
- Max. tray depth for SKIN packaging (mm) - 30

FORMAT SIZES FOR PROTRUSION VERSION
- 1x1 (1 tray) max. Size of one tray (mm) - 387x260x100
- 1x2 (2 trays) max. Size of one tray (mm) - 387x116x100
- 2x1 (2 trays) max. Size of one tray (mm) - 178x260x100
- 2x2 (4 trays) max. Size of one tray (mm) - 178x116x100

TYPES OF PACKAGING
- Only sealing
- Vacuum and sealing
- Vacuum, gas and sealing (MAP)
- SKIN (Only for 1x1, 2x1, 3x1 formats)
- SKIN Protrusion (Only for protrusion version)
- Flat board (Only for protrusion version)
- Formats and tray sizes must be discussed

TYPES OF CUTTING
- Contour cutting

POTENTIAL OPTIONS
- Photo cell for printed film
- Automatic tray lift
- Special insert to save gas and to increase speed
- Built in vacuum pump (40 – 100 m^3/h)
- Formats of other sizes and shapes (round, etc.)
- Liquid separator in the vacuum line
- Format storage

SPECIFICATION OF FILMS
- Film roll width (mm) – up to 500
- Film roll width (mm) - up to 440 (for protrusion version)
- Film roll diameter (mm) – 250
- Film thickness (µm) 60 – 120

ELECTRIC PARAMETERS
- 400V – 3 – 50Hz
- 220V – 3 – 60Hz

COMPRESSED AIR – 6 - 7 (bar)
PROTECTIVE GAS – 2 - 6 (bar)
MACHINE WEIGHT – 490 (kg)

TSS STANDARD VERSION

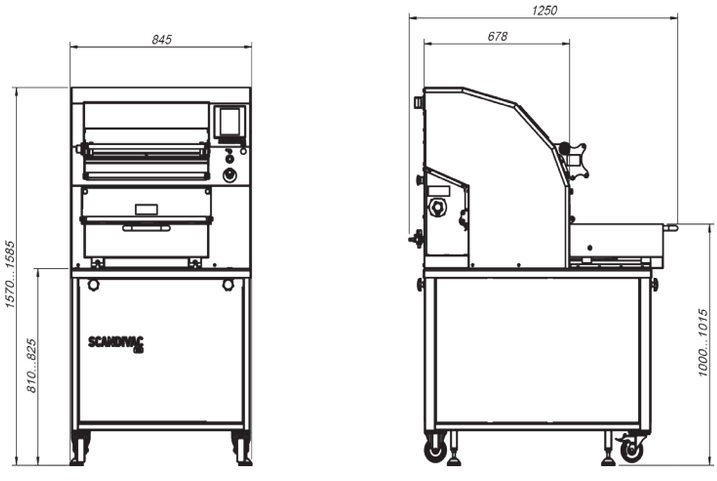

TSS PROTRUSION VERSION

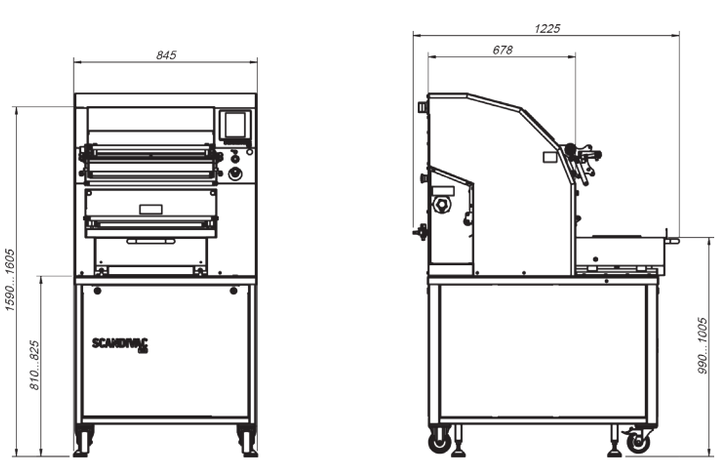



SIA SCANDIVAC

Plieņciema iela 16, Mārupe,
Mārupes novads, LV-2167, Latvija

phone: +371 639 23813
fax: +371 639 60316

info@scandivac.com

www.scandivac.com

SCANDIVAC is traysealing machines made by company SIA SCANDIVAC, established in 1991. Company manufactures various models of packaging machines, as well as different kind of additional units.

Being in a close collaboration with partners and customers, lot of attention is paid to the development and improvement of the packaging machines. SCANDIVAC supplies equipment for meat processing companies, dairy industry companies, companies of fish industry, pharmaceutical companies and to the companies from other industries.