bph Attachments

NATIONWIDE DEPOT NETWORK

National Sales, Hire, Servicing & Repairs

bphattachments.com

Contents

About BPH Attachments	03
Servicing, repairs & specialist services	04-05
Hydraulic Hammers	06-07
Skidsteer & Backhoe Hydraulic Hammers	08-09
Heavy Duty Selector Grabs	10-11
Piling Hammers	12-13
Multi Processors	14-15
Static Pulverisers	16-17
Rotating Pulverisers	18-19
Mini Crackers	20-21
Rock Wheels	22-23
Rotary Screening Buckets	24-25
Shaft Screening Buckets	26-27
Compactor Plates	28-29
Patch Planers	30-31
Pallet Forks & Pipe Lifters	32-33
Pro-Broom	34-35
Rehandling Clamshell Grabs	36-37
Digging Clamshell Grabs	38-39
Scrap Grabs	40-41
Timber Grabs	42-43
Tined Timber Grabs	44-45
Forestry Tree Shears	46-47
LaBounty MSD Mobile Shears	48-49
OilQuick Coupler	50-51
Hydraulic Magnets	52-53
Flails	54-55
Swinging & Fixed Hammer Mulchers	56-57
Excavators Augers	58-60

About BPH Attachments

BPH Attachments sell, hire, service and repair hydraulic excavator attachments and are the sole importer of the PRODEM brand of attachments, which are known for their quality, durability and cost effectiveness.

From our four depot locations, we offer nationwide next-day delivery on in-stock attachments. We also hold an extensive stock of PRODEM parts, and our specialist engineers service and repair all brands of attachments.

When you hire or purchase a PRODEM attachment from us you are getting a tried and tested product – we run PRODEM attachments in our own extensive hire fleet and are confident in their quality.

But, should you need them, our specialist mobile engineers will be on hand to support you.

We are a family-run business with over 50 years' experience in the construction industry. This means we have the knowledge and experience to advise and support you. We also like to think we're great folk to do business with.

We are quick, our products are reliable, and our support is there when you need it.

We are quick, our products are reliable, and our support is there when you need it.

- Hire
- Servicing & repairs
- Sales
- Parts

Servicing, Repairs and Specialist Services

We pride ourselves on being able to service and repair all makes and models of hydraulic attachments. We also stock a comprehensive range of PRODEM parts, which are available for next day delivery, and we can supply high-quality tools and parts for all brands of hydraulic hammers and attachments.

Our tailored service contracts are designed to offer best value and keep your attachments working smoothly.

We have invested in specialist equipment to ensure that attachment servicing and repairs are carried out quickly and as cost effectively as possible. This includes everything from specialist pits with hydraulically raising floors to large air driven torque multipliers.

It is differences like these which allow us to give you the best service possible and ensure that customer repairs are carried out professionally. We even have specialist line-boring and welding machinery to repair grabs, brackets, buckets and excavator arms.

All our work is carried out by our own specialist, expertly-trained engineers. Before any repair work is done, we provide a full report and quote including photographs of critical parts. All repairs are carried out using high quality parts and come with a 3-month warranty.

Make the most of your capital investment – service and repair to maintain productivity!

Hydraulic Hammers

	PRB008	PRB010	PRB030	PRB040	PRB050	PRB060	PRB100	PRB150
Working Weight (kg)	80	121	149	249	315	472	555	1029
Required Oil Flow (lpm)	12-30	15-25	25-35	30-50	35-65	45-90	60-110	80-140
Operating Pressure (bar)	100-130	100-130	100-130	110-140	130-170	130-170	140-180	140-180
Impact Energy (max) – Low Speed (joule)	N/A	N/A	N/A	N/A	N/A	N/A	N/A	2500
Impact Energy (max) – High Speed (joule)	110	180	300	450	700	1000	1350	2150
Impact Frequency – Low Speed (bpm)	N/A	N/A	N/A	N/A	N/A	N/A	N/A	380-700
Impact Frequency – High Speed (bpm)	500-1000	700-1200	550-1000	550-1000	550-1000	520-1000	500-1000	550-850
Tool Diameter (mm)	42	45	50	58	68	80	93	105
Excavator Weight Class (t)	0.6-1.5	0.7-2.5	1.5-4.5	2.5-6	3.5-8	5-11	7-15	12-20

	PRB170	PRB200	PRB250	PRB300	PRB400	PRB500	PRB750	PRB1000
Working Weight (kg)	1269	1539	1799	2461	3433	4119	7150	10070
Required Oil Flow (lpm)	110-170	100-150	130-180	170-240	200-280	230-330	250-350	410-530
Operating Pressure (bar)	160-180	160-180	160-180	165-185	165-185	165-185	155-160	165-185
Impact Energy (max) – Low Speed (joule)	2800	3500	4300	6100	7600	10400	13000	17000
Impact Energy (max) – High Speed (joule)	2200	2800	3200	4200	6000	7900	10000	14000
Impact Frequency – Low Speed (bpm)	350-600	340-550	330-500	310-490	330-450	250-370	250-350	260-340
Impact Frequency – High Speed (bpm)	550-750	440-700	430-650	400-680	420-600	350-500	285-480	360-470
Tool Diameter (mm)	117	125	135	150	165	180	210	245
Excavator Weight Class (t)	14-24	16-25	20-30	26-35	32-45	40-70	65-100	85-140

Product features

A Large through bolts

B Only 2 internally moving parts

C Anti-blank firing (PRB170 upwards)

D Dual speed control (PRB170 upwards)

E Silenced & Vibration dampened

F Centralised lubricating system

G Heavy duty protective casing

PRODEM
PRB050
119

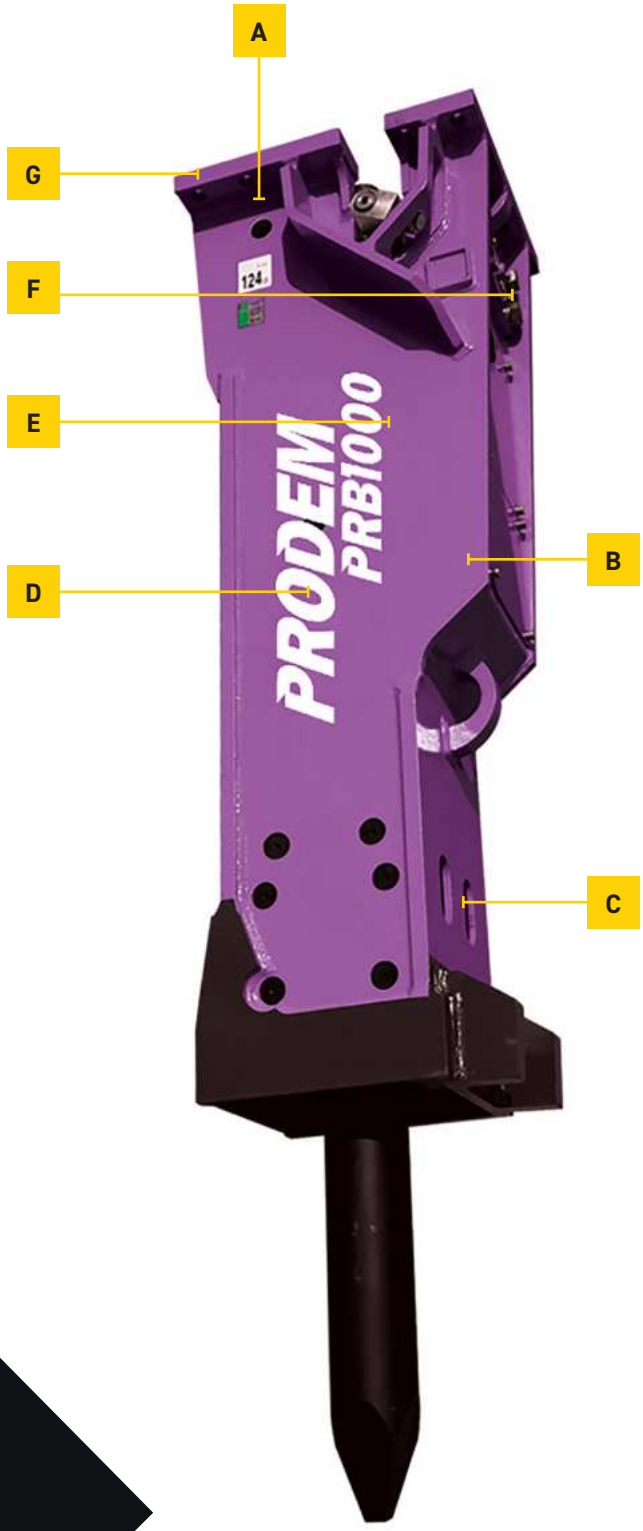
A
G
F
E
D
B
C
PRODEM
PRB1000
124

PRODEM
PRB200

PRODEM.

Skidsteer & Backhoe Hydraulic Hammers

Skidsteer Hydraulic Hammer

	PRB010	PRB030	PRB040-SL
Work Weight (kg)	123	149	290
Required Oil Flow (lpm)	15-25	20-35	50-70
Operating Pressure (bar)	100-130	100-130	110-140
Blow Frequency (bpm)	700-1200	550-1000	550-1000
Impact Energy (joule)	180	300	450
Tool Diameter (mm)	Ø45	Ø50	Ø58
Carrier Weight (tonne)	0.7-1.5	1.5-4.5	2.5-6

Skidsteer Series

SL Developed for skidsteer loaders to meet the market requirement of higher impact energy and optimal performance.

Backhoe Hydraulic Hammer

	PRB050-NL	PRB060-NL	PRB0100-NL
Work Weight (kg)	274	401	485
Required Oil Flow (lpm)	35-65	45-90	60-110
Operating Pressure (bar)	130-170	130-170	140-180
Blow Frequency (bpm)	550-1000	550-1000	500-1000
Impact Energy (joule)	700	1000	1400
Tool Diameter (mm)	Ø68	Ø80	Ø93
Carrier Weight (tonne)	3.5-8	5-11	7-15

Backhoe Series

NL Developed for backhoe loaders to meet the required design for fold-away transportation by road.

Skidsteer Hydraulic Hammer

Backhoe
Hydraulic Hammer

PRODEM.

Heavy Duty Selector Grabs

	Working Weight (kg)	Pressure – Open/Close (bar)	Oil Flow – Open/Close (lpm)	Max Pressure – Rotation (bar)	Oil Flow – Rotation – L/Min (mm)	Width (mm)	Max Opening (mm)	Capacity (l)	Closing Force (kn)	Excavator Weight Class (t)
PSG75-D	75	300	15	210	5	300	600	30	6	0.7-1.2
PSG100-D	90	300	20	210	5	350	770	40	7	1-2
PSG150-D	140	300	25	210	10	450	800	70	15	1.5-3
PSG200-D	240	300	35	210	10	500	1160	100	20	2.5-4
PSG300-D	280	300	35	210	10	500	1160	100	20	2.5-5
PSG400-D	350	300	40	210	12	600	1400	150	23	4-6
PSG450-D	400	300	50	210	12	700	1500	200	24	5-8
PSG452-D	450	320	70	210	15	700	1550	200	24	6-11
PSG502-D	600	350	90	210	15	600	1800	300	30	7-12
PSG603-D	775	350	100	210	25	800	1800	400	35	10-16
PSG804-D	925	350	120	210	25	800	1950	500	46	12-20
PSG904-D	960	350	120	210	25	920	1950	600	46	13-20
PSG1004-D	995	350	120	210	25	1000	1950	700	46	16-20
PSG1104-D	1350	350	150	210	35	920	2100	750	55	16-25
PSG1204-D	1415	350	160	210	35	1000	2100	800	68	17-28
PSG1404-D	1500	350	160	210	35	1200	2100	850	68	20-28
PSG1704-D	1750	350	170	210	35	1200	2250	900	80	23-30
PSG1804-D	1800	350	170	210	35	1200	2400	950	80	24-35
PSG1904-D	1900	350	180	210	35	1200	2250	900	80	25-38
PSG2504-D	2435	350	200	210	35	1360	2230	1000	90	28-40
PSG2704-D	2600	350	200	210	35	1360	2230	1100	90	30-50
PSG3004-D	2800	350	200	210	35	1500	2460	1300	90	35-50
PSG4000-D	3910	350	250	210	40	1500	2850	1500	110	40-65
PSG4500-D	4200	350	250	210	50	1500	2850	1500	110	45-80
PSG5003-D	5000	350	300	210	60	1500	3000	1600	130	45-100
PSG8000-D	7250	350	320	210	70	1800	3800	3600	150	70-120
PSG14000-D	13000	350	350	250	100	1800	4400	4600	180	100-200
PSG20000-D	18000	350	375	250	125	2040	4850	6700	230	175-300

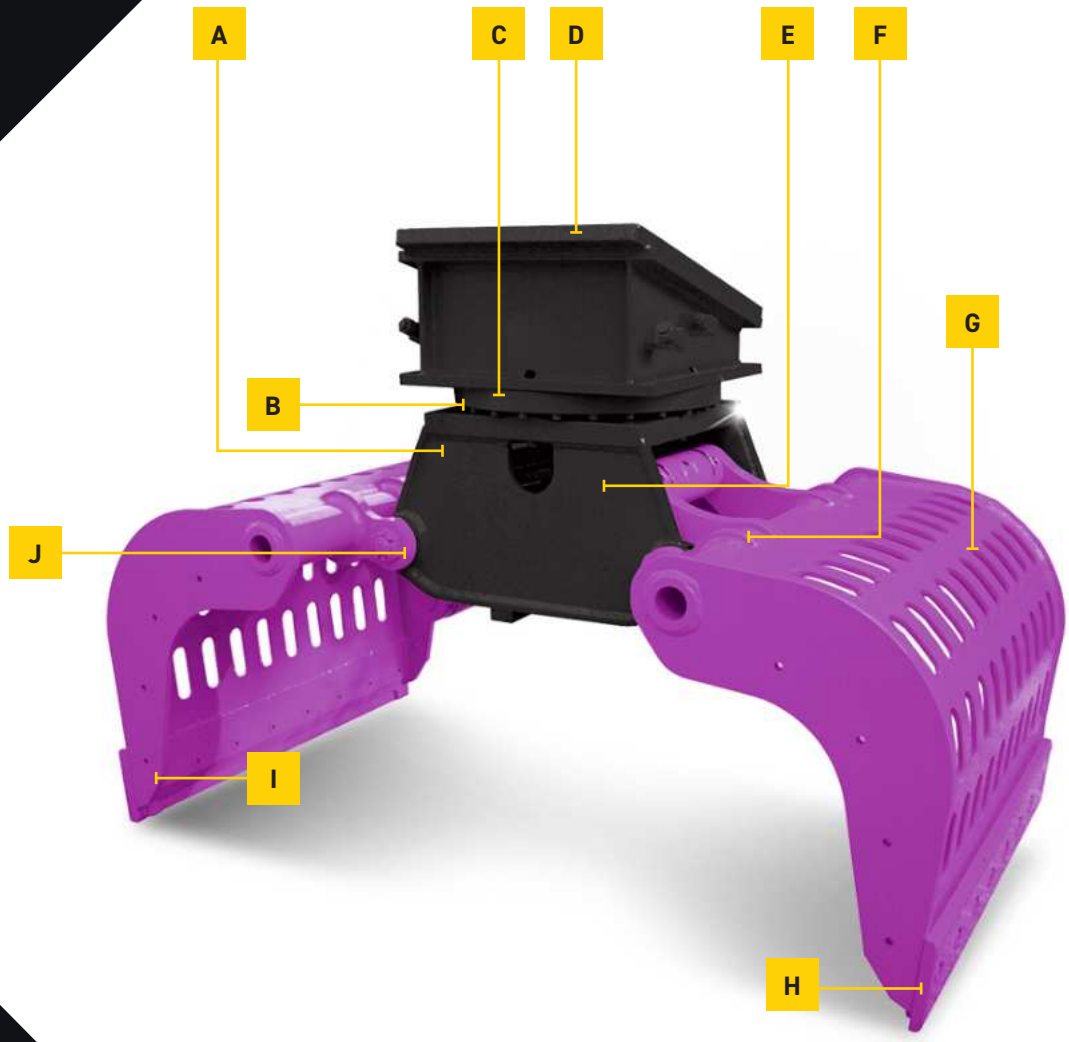

Product features

- **A** High powered, end dampened, motionless cylinders
- **B** Continuous 360° rotation
- **C** Heavy duty slew ring
- **D** Twin motors (PSG603 upwards)
- **E** Heavy duty protective chassis with large diameter pins
- **F** Extremely heavy duty shell connections
- **G** One-piece perforated HARDOX shell skins
- **H** Reversible and replaceable wear blades with countersunk bolts
- **I** Wide opening/large load capacity
- **J** Large Diameter Pins

PRODEM.

Piling Hammers

	PMV060	PMV170	PMV250	PMV300	PMV350	PMV400	PMV450
Excavator Class (t)	6-12	13-22	24-26	30-35	35-40	35-40	40-50
Eccentric Movement	2.1	4	5.2	6.3	7.3	9	12.3
Centrifugal Force	140	276	354	434	502	615	838
Centrifugal Force MAX	170	334	428	525	607	744	1015
Frequency	2500	2500	2500	2500	2500	2500	2500
Frequency MAX	2750	2750	2750	2750	2750	2750	2750
Oil Flow (lpm)	62	100	150	201	233	275	313
Oil Flow MAX (lpm)	69	110	165	221	256	303	344
Power	33	53	80	107	124	147	167
Power MAX	37	59	88	118	137	162	183
Amplitude	15	15	14	16	15	14	19
Pulling Force	59	147	147	147	147	235	235
Dynamic Weight (kg)	270	534	749	771	929	1255	1292
Total Weight (kg)	384	786	1080	1096	1253	1740	1798
Clamping Force Clamps for Sheet Piles	203	304	643	643	643-814	814-1003	1003
Clamps for Sheet Piles Weight (kg)	88	192	327	327	327-502	502-620	515

Product features

A Flexible Mounting Bracket to suit all Excavator Requirements

B Housing to protect Piling Hammer and internal hoses

C High-performance driving/extracting power

D Heavy Duty Hydraulic Clamp

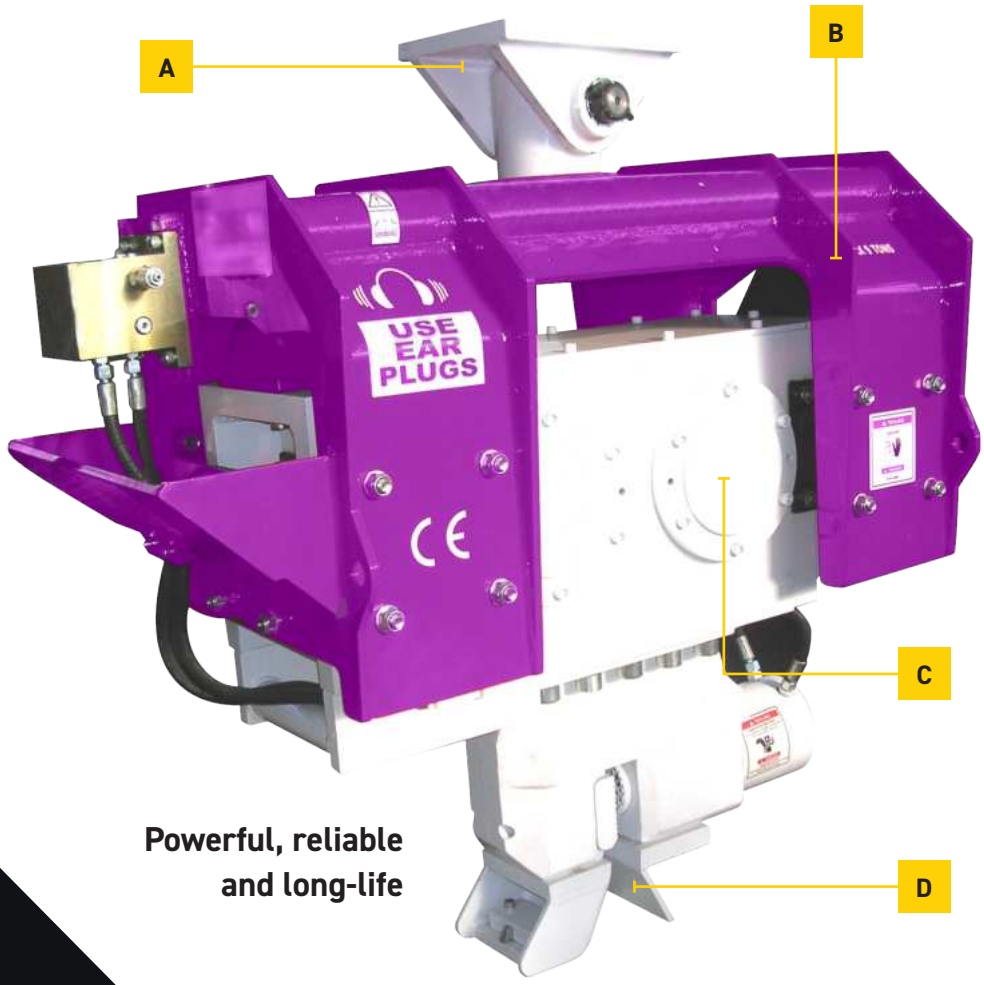

Powerful, reliable and long-life

PRODEM.

Multi Processors

	PMP 050-P	PMP 050-S	PMP 130-C	PMP 130-D	PMP 130-P	PMP 130-S	PMP 130-MS	PMP 220-C	PMP 220-D	PMP 220-P	PMP 220-S	PMP 220-MS
Working Weight (kg)	380	380	1231	1330	1351	1256	1330	2040	2050	2210	1880	2040
Overall Width (mm)	580	580	1200	1187	1157	989	989	1483	1368	1508	1083	1083
Max Jaw Opening (mm)	430	220	643	629	647	366	412	903	797	893	503	523
Cutting Blade Length (mm)	100	100	214	214	219	319	446	237	355	237	348	301
Required Oil Flow (lpm)	30-50	100-180	100-180	100-180	100-180	100-180	100-180	150-250	150-250	150-250	150-250	150-250
Max Operating Pressure (bar)	250	250	350	350	350	350	350	350	350	350	350	350
Max Crushing Force (t)	22	22	62	62	60	65	63	68	70	70	80	87
Excavator Weight Class (t)	2-10	2-10	14-20	14-20	14-20	14-20	14-20	20-28	20-28	20-28	20-28	20-28

	PMP 220-U	PMP 320-C	PMP 320-D	PMP 320-P	PMP 320-S	PMP 320-U	PMP 400-S	PMP 400-P	PMP 400-D	PMP 400-MS	PMP 400-C	PMP 400-N
Working Weight (kg)	2350	3030	3001	3130	2990	3300	4575	4781	4635	4593	4694	4465
Overall Width (mm)	1189	1684	1560	1643	1332	1486	1612	1895	1879	1612	1970	1823
Max Jaw Opening (mm)	611	1119	983	1008	573	753	676	1184	1209	707	1274	316
Cutting Blade Length (mm)	450	240	461	240	563	600	631	264	507	775	264	517
Required Oil Flow (lpm)	150-250	200-300	200-300	200-300	200-300	200-300	280-360	280-360	280-360	280-360	280-360	150-250
Max Operating Pressure (bar)	350	350	350	350	350	350	350	350	350	350	350	350
Max Crushing Force (t)	80	95	101	103	104	110	178	166	158	173	159	205
Excavator Weight Class (t)	20-28	28-40	28-40	28-40	28-40	28-40	36-52	36-52	36-52	36-52	36-52	36-52

Crushing

Demolition

Pulveriser

Shear

Universal

Mobile Shear

Product features

A Pressure relief valve for protecting hydraulic motor

B Unlimited 360° hydraulic rotation complete with heavy-duty Slew ring

C Large hardened bolt on teeth made of special wear resistant steel

D Six different interchangeable jaws for crushing, pulverising, shearing and demolition

E Single-Pin Jaw Mechanism for enhanced shearing force and working and maintenance efficiency

F Adjustable main pin to ensure maximum cutting performance

G Fully Reversible Rectangular Steel Cutting Blades for lower maintenance cost and less downtime

H Speed valve for high speed jaw opening and closing

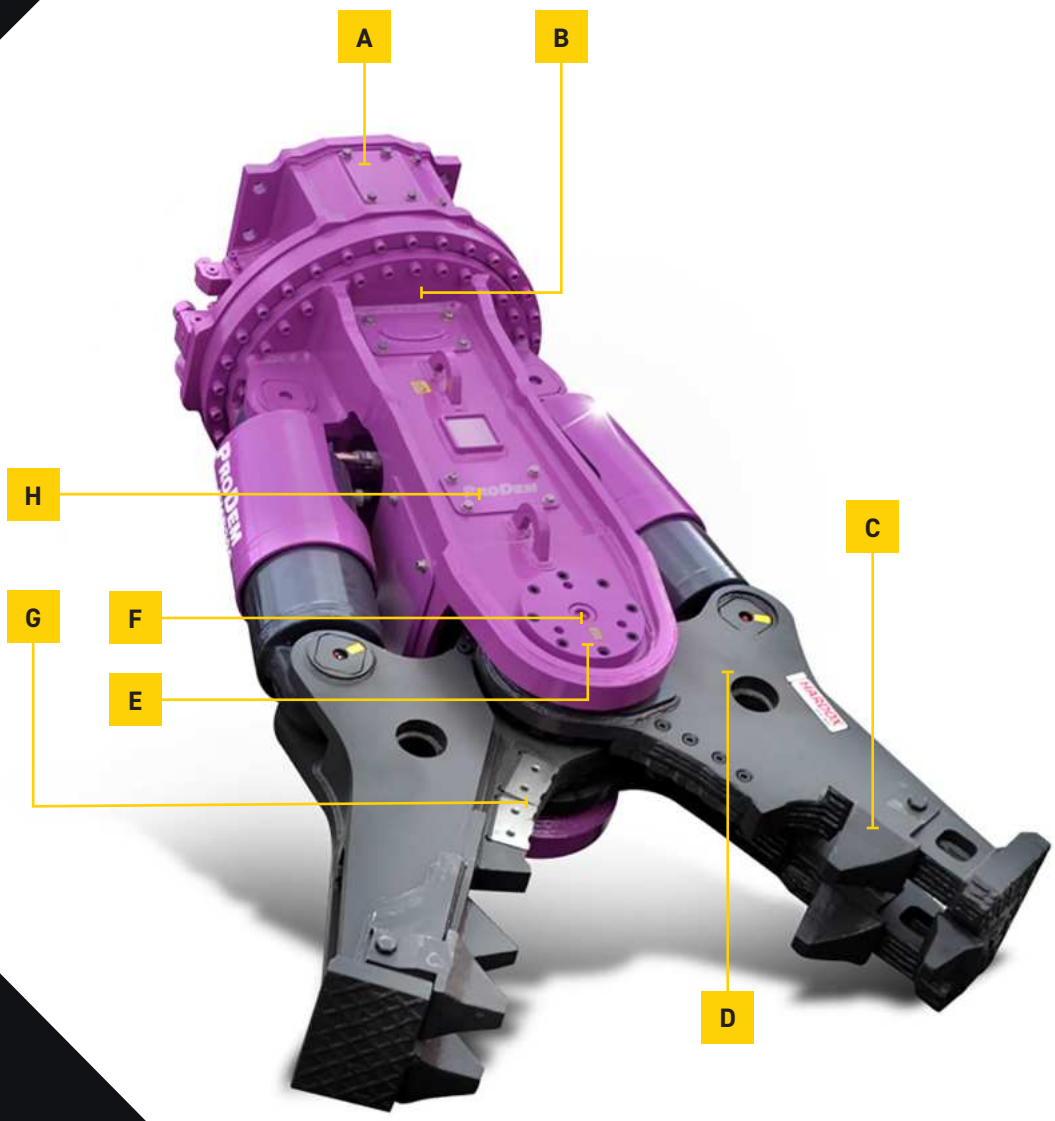

PRODEM.

Static Pulverisers

	PHP080	PHP160	PHP190	PHP220	PHP320	PHP420
Working Weight (kg)	518	952	1310	2030	2503	3321
Overall Length (mm)	1275	1656	1985	2206	2388	2633
Jaw Width – Fixed (mm)	340	384	438	470	532	550
Jaw Width – Moving (mm)	290	330	350	372	386	428
Max Jaw – Opening (mm)	478	680	732	889	1061	1105
Cutting Blade – Length (mm)	110	240	240	360	360	240
Required Oil Flow (lpm)	80-100	100-180	150-250	150-250	200-300	200-300
Max Operating Pressure (bar)	300	350	350	350	350	350
Crushing Force – tip (t)	39	56	59	70	85	116
Excavator Weight Class (t)	7-10	13-20	16-25	20-28	28-36	36-44

Product features

A Jaw design leaves re-bar steel clean

B Cracking tooth on the outer end of jaw for high productivity

C Large bolt on tooth style (PHP220 upwards) for quick and effective replacement

D Bolt on Ground Engaging Teeth (PHP220 upwards)

E Hardened teeth made from special materials for enhanced durability

F Fully reversible steel cutting blades

G Trunnion type cylinder for maximum breaking force throughout jaw closing motion, as well as opening motion

H Integrated speed-up valve for increased speed and performance

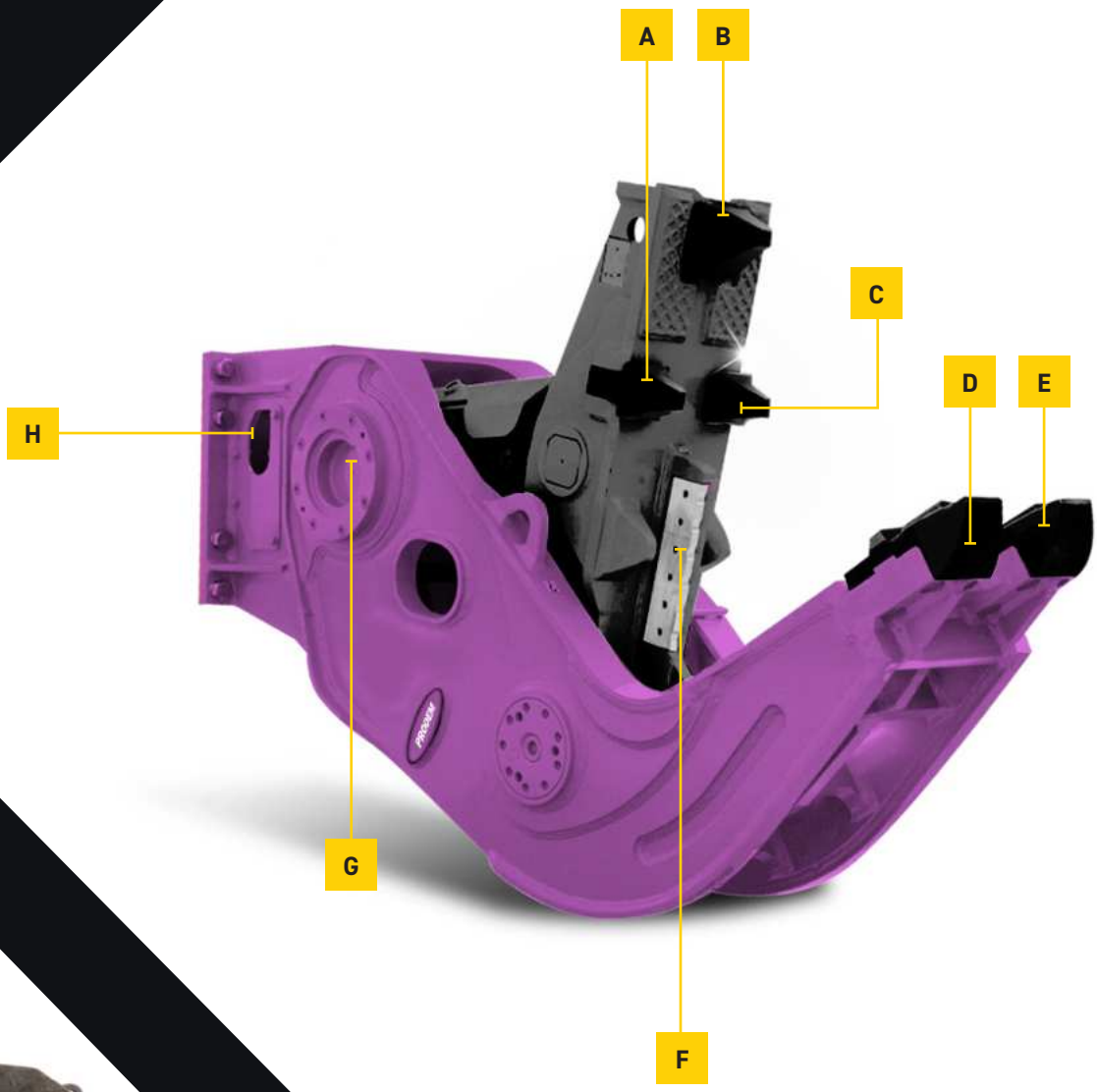

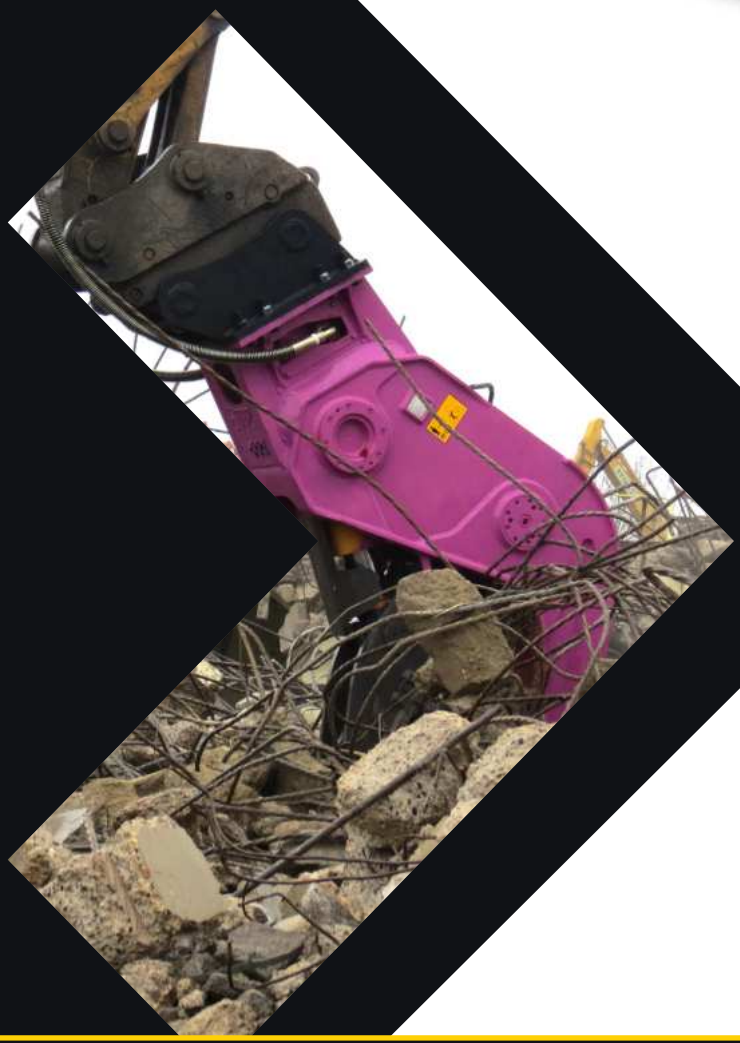

PRODEM.

Rotating Pulverisers

	PHP160R	PHP200R	PHP250R	PHP350R	PHP450R
Working Weight (kg)	1250	1817	2517	3017	4219
Overall Length (mm)	1840	2134	2474	2686	3075
Jaw Width – Fixed (mm)	384	438	470	532	550
Jaw Width – Moving (mm)	290	350	372	386	398
Max Jaw – Opening (mm)	720	765	925	1066	1142
Cutting Blade – Length (mm)	240	240	360	360	240
Required Oil Flow (lpm)	100-180	150-250	150-250	200-300	200-300
Max Operating Pressure (bar)	350	350	350	350	350
Crushing Force – tip (t)	56	61	73	85	114
Excavator Weight Class (t)	13-16	17-25	20-27	28-36	40-50

Product features

A Hardened teeth made from special materials for enhanced durability

B Large bolt on tooth style (PHP250R upwards) for quick and effective replacement

C Cracking tooth on the outer end of jaw for high productivity

D Jaw design leaves re-bar steel clean

E Wide jaw opening

F Bolt on Ground Engaging Teeth (PHP250R upwards)

G Fully reversible steel cutting blades

H Trunnion type cylinder for maximum breaking force throughout jaw closing motion, as well as opening motion

I Integrated speed-up valve for increased speed and performance

J Large diameter slew ring

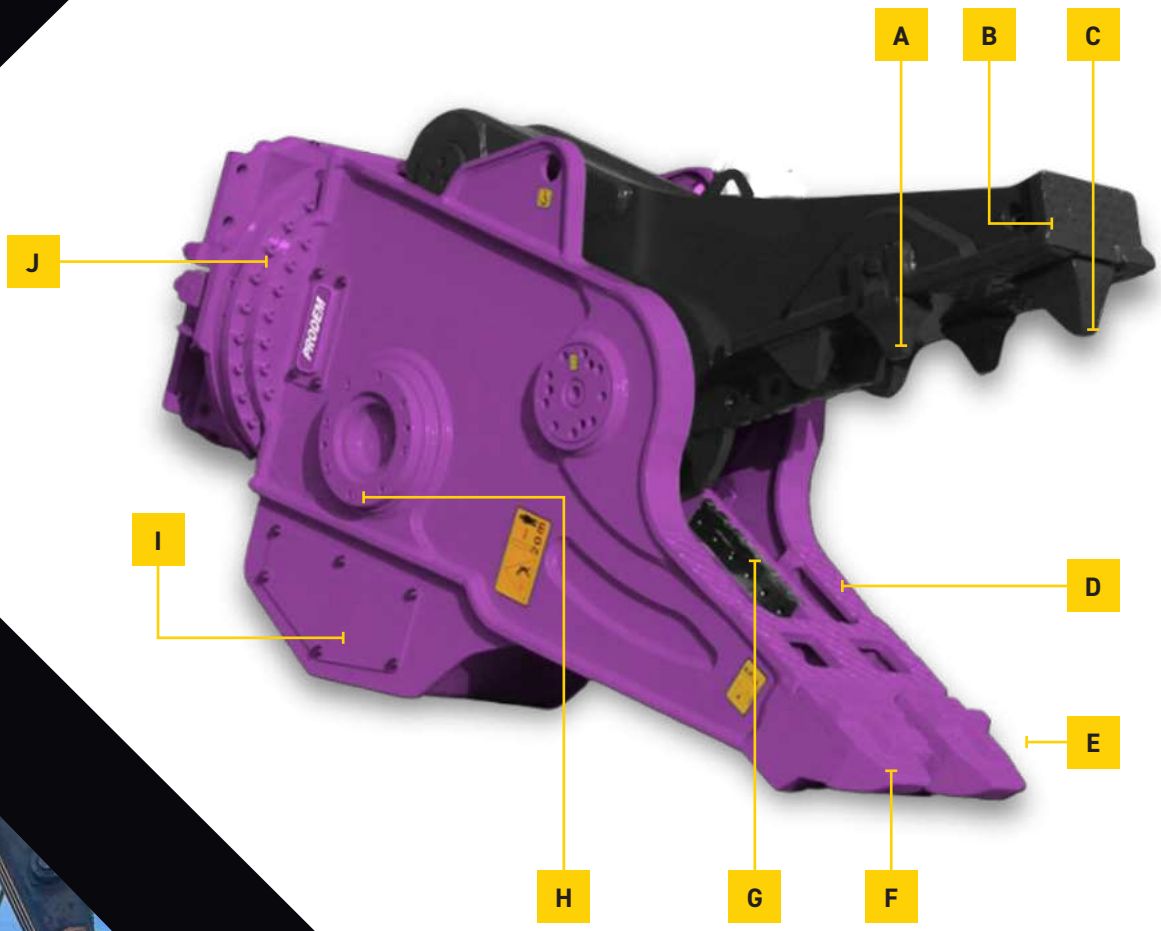

PRODEM.

Mini Crushers

	PMC015	PMC020	PMC025	PMC030	PMC050
Working Weight (kg)	143	191	224	308	480
Overall Length (mm)	969	1031	1104	1195	1362
Overall Width W (mm)	659	709	800	776	850
Max Jaw – Opening (mm)	320	370	430	430	520
Max Jaw – Depth (mm)	258	294	338	367	N/A
Jaw Thickness (mm)	30	40	40	50	96
Cutting Blade – Length (mm)	60	80	80	90	100
Required Oil Flow (lpm)	15-35	20-40	25-45	30-50	50-80
Max Operating Pressure (bar)	210	230	270	270	210
Crushing Force – tip (bar)	210	230	270	270	N/A
Max Crushing (t)	36	47	62	64	99
Rotation Type	FREE	FREE	FREE	FREE	FREE/ Hydraulic Option
Excavator Weight Class (t)	1.5-2	2-3	2.5-3.5	3-4.5	4.5-8

Product features

A 'Knock round' rotation with a durable bearing – optional hydraulic rotation available on PMC050

B Protected hose routing inside the frame

C Easy maintenance

D High-power cylinder

E Fully reversible steel cutting blades with max 4 edges

F Speed-up valve (Optional)

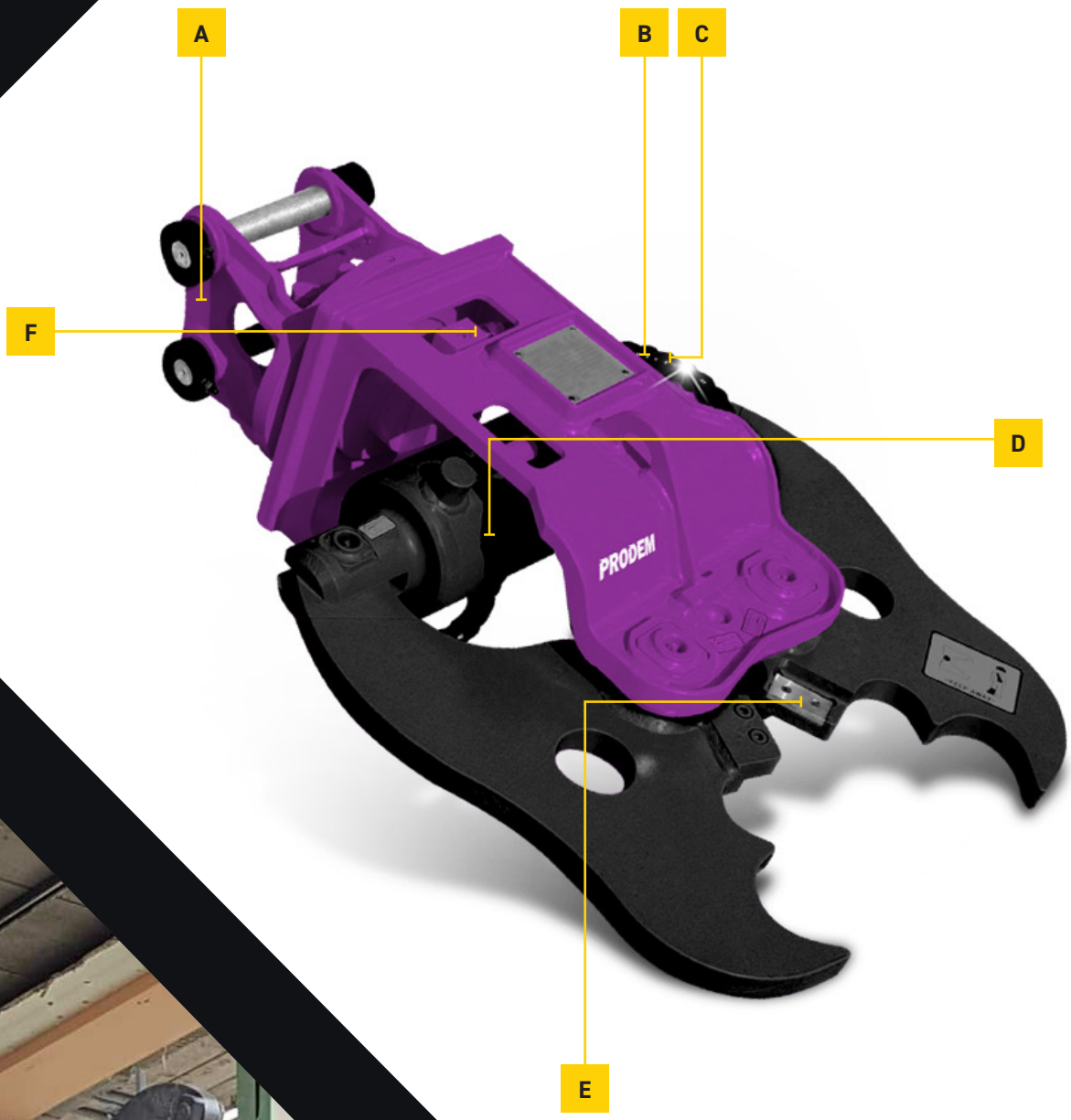

PRODEM.

Rock Wheels

	PRW040	PRW060	PRW100	PRW200	PRW250	PRW300	PRW400	PRW500
Working Weight exc. bracket (kg)	300	470	650	1100	1340	2380	2700	2940
Required oil flow (lpm)	45-80	65-120	90-150	140-190	170-250	240-340	280-400	350-500
Max pressure (bar)	350	350	350	400	400	400	400	400
Max cutting force (kN)	15.1	22.5	30.5	40.2	61	71	96.4	128
Hydraulic motor power (kW)	30	40	50	70	90	120	150	185
Standard drum width (mm)	565	625	700	800	865	965	1000	1270
Drum diameter (mm)	380	450	500	595	660	750	750	750
Distance between drums (mm)	110	130	135	180	190	250	250	330
Tooth holder diameter (mm)	20	22	22	38/30	38/30	38/30	38/30	38/30
Excavator Weight Class (t)	2.5-7	6-12	9-16	14-22	20-34	28-45	40-55	50-75

HP drum - penetrates deep, even into hard materials (standard)

GP drum - recommended for wall profiling (optional)

WB drum - special drum for finishing and profiling (optional)

Mixing drum - with specialist mixing paddles for remediation works

Product features

A Can be operated underwater without any modifications

B Feed line filter protects the motor from impurities

C Interchangeable drums and teeth to suit any application

D Double support bearings for each drum – shaft transmits motion only and bears no load

E Replaceable anti-wear plates

F Dust proof mechanical seals provides protection from dust even when attachment is in the ground

G Frame design prevents material build-up

H PATENTED integrated high displacement hydraulic piston motor gives high torque and performance

I Two hose positions give maximum precision and increased productivity front or side mounted

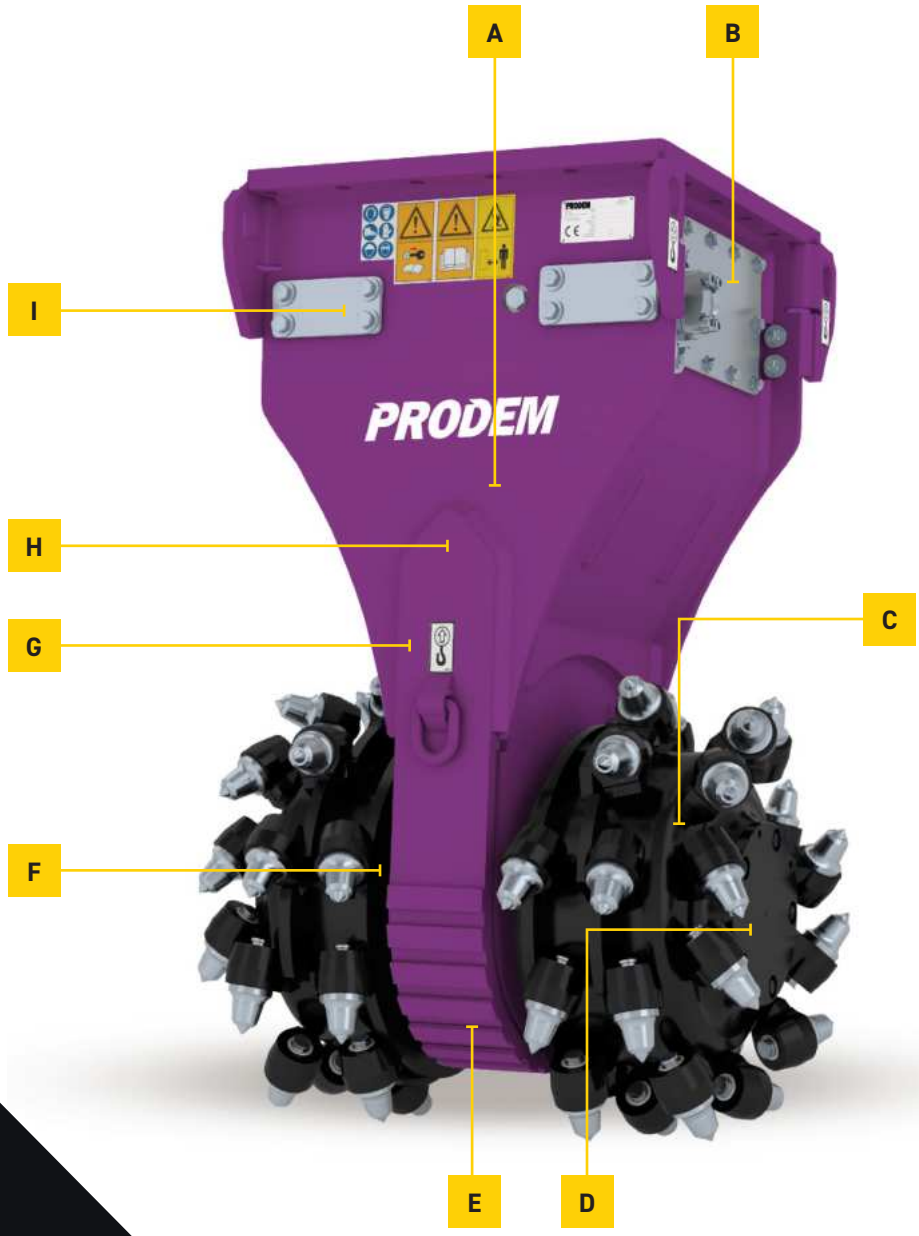

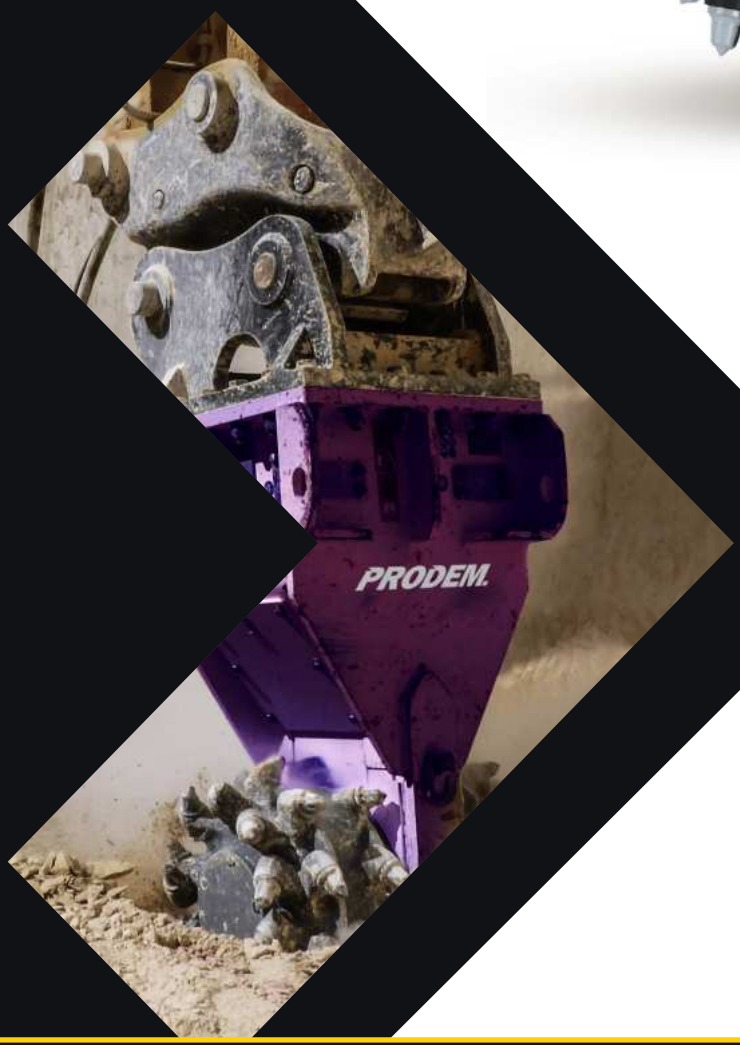

PRODEM.

Rotary Screening Buckets

	PSB 030R	PSB 040R	PSB 050R	PSB 100R	PSB 120R	PSB 200R	PSB 250R	PSB 300R	PSB 500R
Weight (kg)	110	250	350	690	1320	1570	1810	2550	4900
Overall Depth (mm)	740	1070	1175	1480	1950	2190	2250	2600	2950
Overall Height (mm)	630	805	930	1055	1460	1650	1890	2000	2410
Basket Width C (mm)	320	445	515	690	790	925	980	1040	1360
Basket External Diameter D (mm)	500	640	750	840	1170	1340	1560	1700	2000
Inlet Width (mm)	520	700	800	900	1200	1400	1600	1750	2115
Working Capacity (m3)	0.08	0.2	0.3	0.4	0.75	0.9	1.1	1.5	2.7
Max Working Pressure (bar)	120	120	120	120	220	220	220	220	220
Max Oil Flow (l/min)	30	50	50	70	80	80	80	80	80
Drum Speed (rpm)	24/32	18/24	18/24	18/24	18/35	18/35	18/35	18/35	18/27
Excavator Weight Class (t)	1.4-2.8	2.5-5.5	4.5-9	7-14	12-18	16-23	21-33	30-45	40-65

Features PATENTED 4-piece interchangeable screen kit - 20 - 150mm available

Product features

A Integrated high pressure relief valve

B Drum protection casing

C Heavy duty double bearing slew ring

D PATENTED 4-piece interchangeable screens - 20-150mm

E Exclusive wide inlet profile

F Bolt-on wear edges

PRODEM.

Shaft Screening Buckets

	Excavator (kg)	Wheel Loader (bar)	Cutting Width (mm)	Shafts	Throughput (m^3/hr)	Screen Area (m^2)	Weight (kg)	Working Pressure (bar)	Oil Requirment (l/min)	Max Pressure (bar)
PSS010	1.6-4	2-3	500	3	5-7m^3/hr	0.25m^2	200	170-190	30-40	200
PSS020	2.2-4	2-3.5	500	4	6-8m^3/hr	0.30m^2	250	170-190	30-40	200
PSS030	3-5	2.2-4	700	4	7-10m^3/hr	0.40m^2	290	170-190	30-40	200
PSS040	4-10	3.5-5.5	800	3	10-15m^3/hr	0.40m^2	400	200-250	50-60	280
PSS050	6-12	4-6.5	1000	3	16-23m^3/hr	0.60m^2	600	200-250	50-60	280
PSS100	9-15	6.5-8	1200	3	25-38m^3/hr	0.80m^2	905	200-250	90-120	280
PSS130	12-21	8-10	1300	3	32-47m^3/hr	0.98m^2	1400	200-260	150-180	290
PSS150	14-21	10-13	1500	4	44-65m^3/hr	1.30m^2	1450	200-260	150-180	290
PSS250	18-32	10-15	1200	4	52-77m^3/hr	1.10m^2	1850	280-300	150-200	320
PSS300	20-32	12-16	1200	5	67-96m^3/hr	1.40m^2	2050	280-300	150-200	320
PSS350	24-32	13-24	1500	4	64-95m^3/hr	1.40m^2	2300	280-300	150-200	320
PSS400	26-35	14-25	1500	5	80-122m^3/hr	1.70m^2	2500	280-300	150-200	320
PSS450	32-42	17-27	1800	4	78-120m^3/hr	1.75m^2	3100	280-300	200-280	320
PSS500	35-45	-	1800	5	90-168m^3/hr	2.60m^2	3800	280-300	200-280	320
PSS550	38-55	18-30	2200	4	100-160m^3/hr	2.40m^2	4100	280-300	200-280	320

Penta Disc
Designed for fine screening of free-flowing materials and dry soils, with reduced crushing.

Also suitable for stony materials such as crushed stone, gravel, and basalt.

Star Disc
Designed for screening and backfilling of pipes and sewer trenches, delivering high throughput even in wet, cohesive soils.

Mixing Shaft (M80X)
Mixing shaft with mixing blocks
Grain size: 0–60/80 mm

Applications:

Mixing, sifting, and aerating soil
Crushing easily brittle materials
Ensuring high throughput, even in wet soils

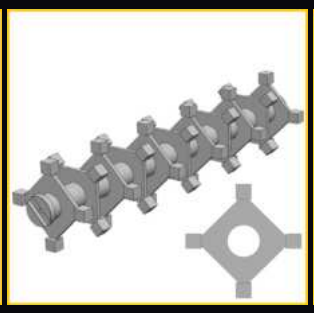

Block Disk (BS254)
Mixed shaft with four contours
Grain size: 0–30/35 mm

Applications:

Mixing, grinding, and aerating
Suitable for compost and liquid soil

Delivers high throughput, even in wet soils

Block Disk (BS252)
Mixed shaft with two contours
Grain size: 0–40/45 mm

Applications:

Mixing, grinding, and aerating
Suitable for compost and liquid soil

Delivers high throughput, even in wet soils

Product features

A Chain driven point-point

B Large screening area

C Quick change shaft system

D Shock valve

E Motors

*Operates on excavators and wheel loaders with no need to remove adapter.

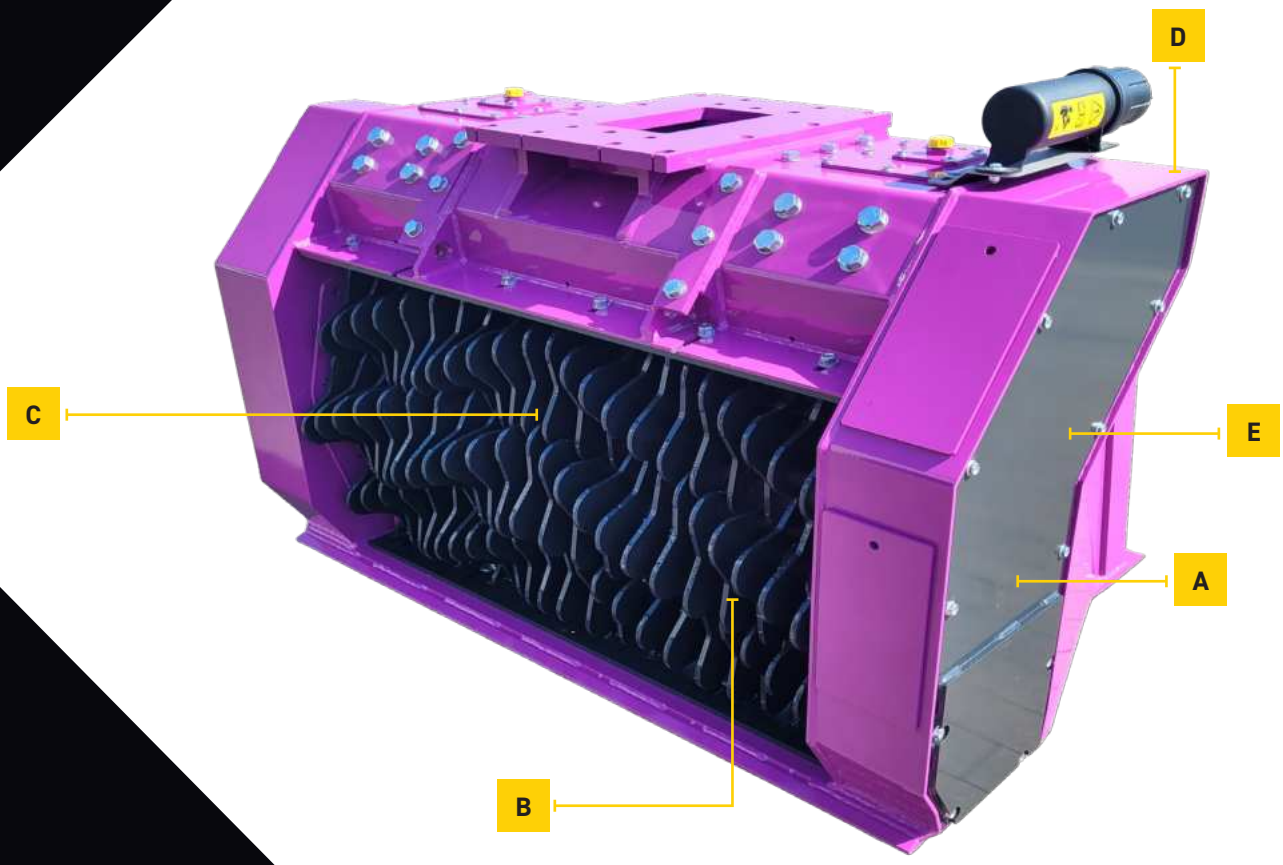

PRODEM.

Compactor Plates

	PHC050 N	PHC100	PHC150	PHC200	PHC300
Working Weight (kg)	260	430	689	1094	1502
Baseplate Size – w x l (mm)	320 X 745	610 X 900	740 X 1050	860 X 1200	1000 X 1300
Impulse Force (t)	2.1	4	6.4	11.2	17.3
Vibrations (per minute)	2100	2000	2000	2000	2000
Operating Pressure (bar)	100-220	100-138	100-138	100-138	100-138
Required Oil Flow (lpm)	45-65	50-120	80-170	110-200	160-250
Excavator Weight Class (t)	4-6	6-10	11-16	17-25	26-40

Product features

A Easy and versatile mounting – adaptor mount style enables the PRODEM compactors to be mounted to any carrier in the recommended weight class

B Flow control valve (priority flow divider) regulates hydraulic in-flow to the motor and prevents over-speeding

C Specially designed cushion rubbers protect the machine and operator from vibrations

D 100% maintenance free – no greasing required due to the housing acting as an oil bath

E Heavy-duty and high efficiency gear motor with splined shaft and high-pressure motor seals prevent damage caused by pressure shock during start-up and shutdown

F Self-aligning double row spherical roller bearing provides a long service life to rotating components

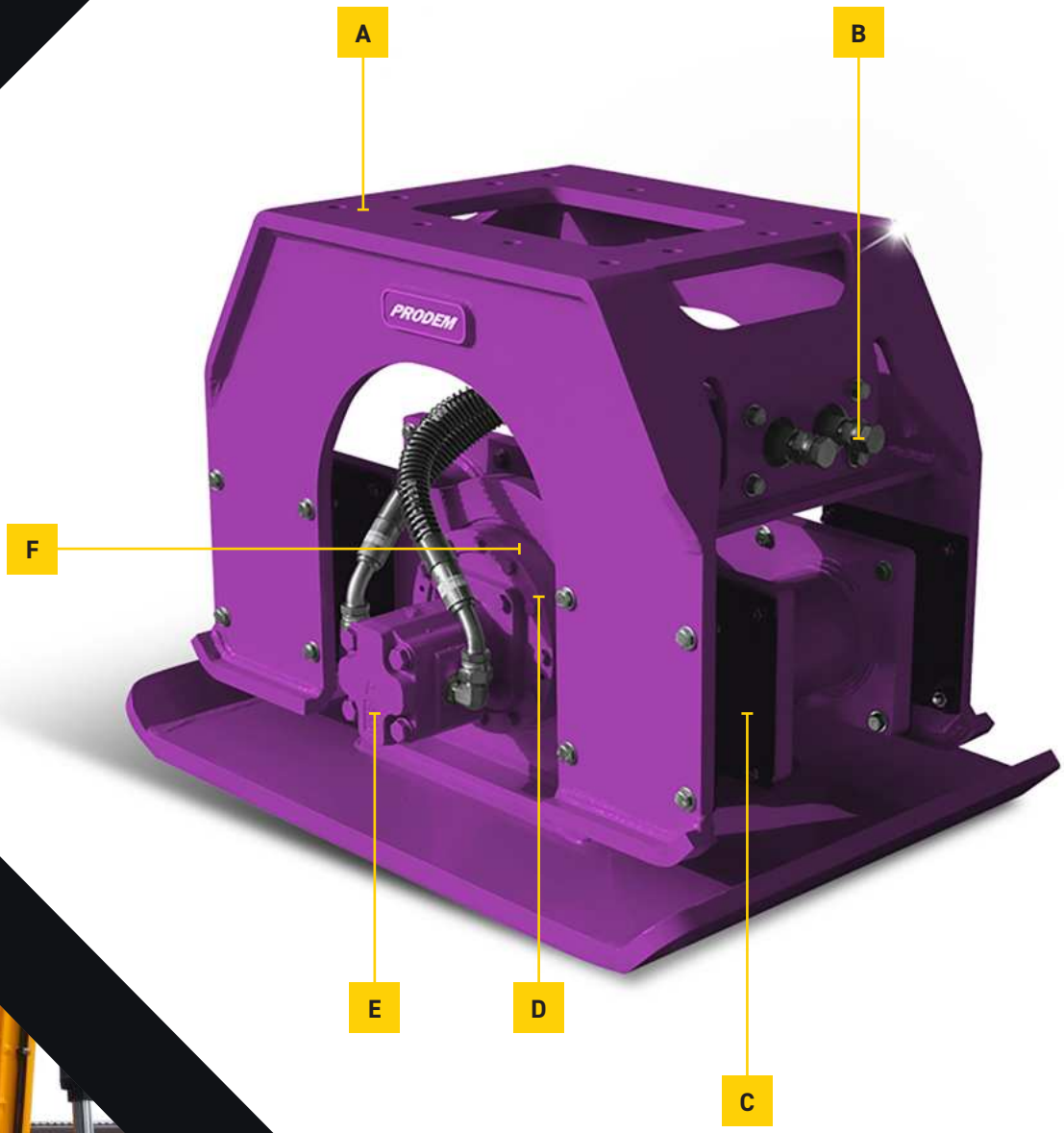

PRODEM.

Patch Planers

	PP200	PP300	PP350 ED	PP400	PP450	PP450 ED	PP600 ED
Min distance from curb (mm)	40	50	50	50	60	75	75
Cutting depth (mm)	Single	Single	Double	Single	Single	Double	Single
Independent RH-LH depth adjustment	No	No	Yes	No	No	Yes	No
Operating weight (kg)	185	390	530	515	710	900	1150
Required oil flow (lpm)	30-50	45-75	55-90	55-90	75-140	90-140	120-200
Max oil pressure (bar)	250	300	300	300	300	300	300
Swinging support rotation angle	120°	127°	118°	118°	120°	105°	105°
Standard drum width (mm)	200	300	350	400	450	450	600
Special drums widths (mm)	50-250	50-300	50-350	50-400	75-450	75-450	75-600
Standard drum max depth (mm)	70	100	120	120	150	180	200
Special drums max depth (mm)	125	130	150	150	200	220	250
Excavator Weight Class (t)	2-4	3-7	6-9	6-9	8-13	10-16	16-22

- **ED models feature PATENTED independent RH-LH depth slides which allow perfect side by side passes.**
- **Optional extra: PATENTED Performer which calibrates to excavator working pressure and provides a visual indication of maximum performance. (See point A)**

Product features

A PATENTED performer (optional) calibrates to excavator working pressure. Provides easy-to-see visual indicator of available power to maximise performance

B Swinging support pivots on the same rotation axis as cutting drum to maintain a perfect planing surface regardless of ground contour or excavator position

C PATENTED independent RH-LH depth slides (ED models only) – each side can be independently adjusted to give perfect surfaces with side by side passes

D Mechanical depth adjuster as standard or hydraulic (optional)

PRODEM.

Pallet Forks & Pipe Lifters

Pallet Forks

	PF5-8	PF10-24	PF30-50
Pin size	45-60mm	65-80mm	90-110mm
Max Fork Reach (mm)	1050	1200	2385
Max Fork Width (mm)	880	1225	1390
S.W.L (kg)	1500	3000	4000
Working Weight (kg)	220	240	525
Excavator Weight Class (t)	5-8	10-24	30-50

NB. We do not recommend or advocate the use of fork extensions on our Excavator Mounted Pallet Forks as it is unsafe to do so.

Product features

- Adjustable pin centres
- Fold back forks for easy storage and excellent site safety
- Self-Levelling
- Adjustable forks
- Can be supplied with multiple sets of pins to suit different size excavators
- Slots to store spare pins

Pipe Lifter

WLL. (Kg)	2000	4000
Height (mm)	650	650
Width (mm)	500	500
Length (mm)	2400	2700
Weight (kg)	230	300
Beam Length (mm)	1500	1800
Excavator Weight Class (t)	Both models are suitable for 13 - 22t	

Product features

- 2t or 4t working load limits
- Pipe insertion pusher heels
- Adjustable pin centres fit most excavators
- 65mm and 80mm pins
- 2.5m pipe length capacity
- 1.8m beam length capacity

Pallet Forks

Pipe Lifter

PRODEM.

Pro-Broom

	PB120	PB150	PB180	PB210	PB240	PB300
Width (mm)	1200	1500	1800	2100	2400	3000
Row of bristle	11	11	11	11	11	11

Not only can you dig, create and construct, but now you can also tidy up with the same machine – with ease!

Thanks to the clever design there is no moving parts, and no hydraulic power required. The rows of stiff bristles "scrub" the surface as you pass over it, and the result is a clean and tidy working area.

And more than "just" cleaning up, this broom is also great for leveling material such as soil, gravel, sand etc., which makes it great for landscapers and construction companies.

- Very quick to attach and get going
- Very little dust when in use
- No spraying or scattering which makes it safe around people, cars and buildings etc.
- As it's easy to use **THE CLEANING GETS DONE**

Product features

A Strong structural reinforcements makes sure the broom withstands hard work

B Bolted hitch, can easily be changed to accomodate different machines

C Heavy Duty end caps allows you to sweep "sideways"

D Bristles can easily be replaced in minutes – slide out/slide in

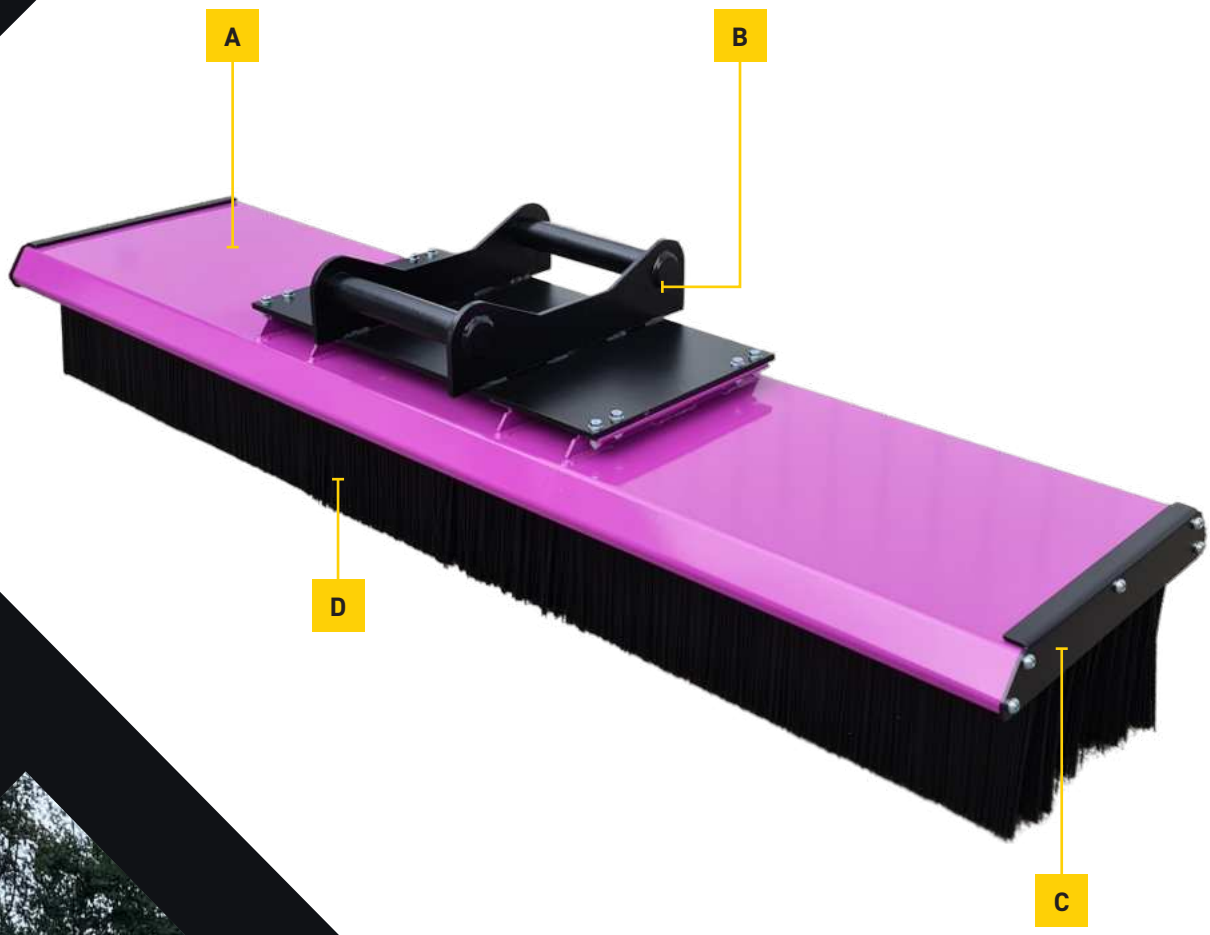

PRODEM.

Rehandling Clamshell Grabs

	Max. Grab Capacity (t)	Max. Rotation Load (t)	Material Weight Up (t/m3)	Working Pressure – Rotation (bar)	Working Pressure – Open/Close (bar)	Max. Oil Flow – Rotation (l/min)	Max. Oil Flow – Open/Close (l/min)	Excavator Weight Class (t)	Material Handler Weight Class (t)
RCS4.6	4	15	2	140	350	35	110	20-30	Up to 30
RCS5.6	8	26	2.6	140	350	35	140	30-60	30-60
RCS6.6	12	35	2.6	200	320	50	170	50-80	50-80
RCS7.6	15	40	2.6	140	350	50	170	80-165	Up to 100

	Capacity (l)	Weight (kg)	Grab Width (mm)	Height (mm) Closed	Height (mm) Open	Opening Width (mm) Open	Rotator Connection Width F (mm)	Mounting Pin Diameter G (mm)
RCS4.6-1000	1000	1371	1100	2490	1770	2130	114	70
RCS4.6-1200	1200	1472	1400	2490	1770	2130	114	70
RCS4.6-1400	1400	1530	1600	2490	1770	2130	114	70
RCS4.6-1600	1600	1591	1800	2490	1770	2130	114	70
RCS5.6-1500	1500	1950	1200	2490	1980	2360	114	70
RCS5.6-2000	2000	2200	2000	2490	1980	2360	114	70
RCS5.6-2500	2500	2300	2400	2490	1980	2360	114	70
RCS6.6-2500	2500	3350	1500	3400	2380	2860	150	80
RCS6.6-3000	3000	3530	1800	3400	2380	2860	150	80
RCS6.6-4000	3000	3920	2500	3400	2380	2860	114	80
RCS7.6-5000	5000	6500	2000	3750	2750	3900	114	80
RCS7.6-6000	6000	6800	2400	3750	2750	3900	114	80
RCS7.6-7000	7000	7550	2800	3750	2750	3900	114	80
RCS7.6-8000	8000	7850	3200	3750	2750	3900	114	80

Product features

A Protection Shield to protect rotation motors and hose connections

B Fully protected compact rotary motor gives endless hydraulic rotation with integrated pressure limitation

C Shells made of high-strength fine-grain steel. Shells are interchangeable throughout each model

D Shell covers (optional) – available with steel covers when handling light materials

E Custom size grabs can be designed to suit customers application

F Extension Shafts and Clay Scrapers available

G Side and bottom cutting edges are manufactured from high strength fine-grain steel, reinforced with HARDOX HB500 profiles

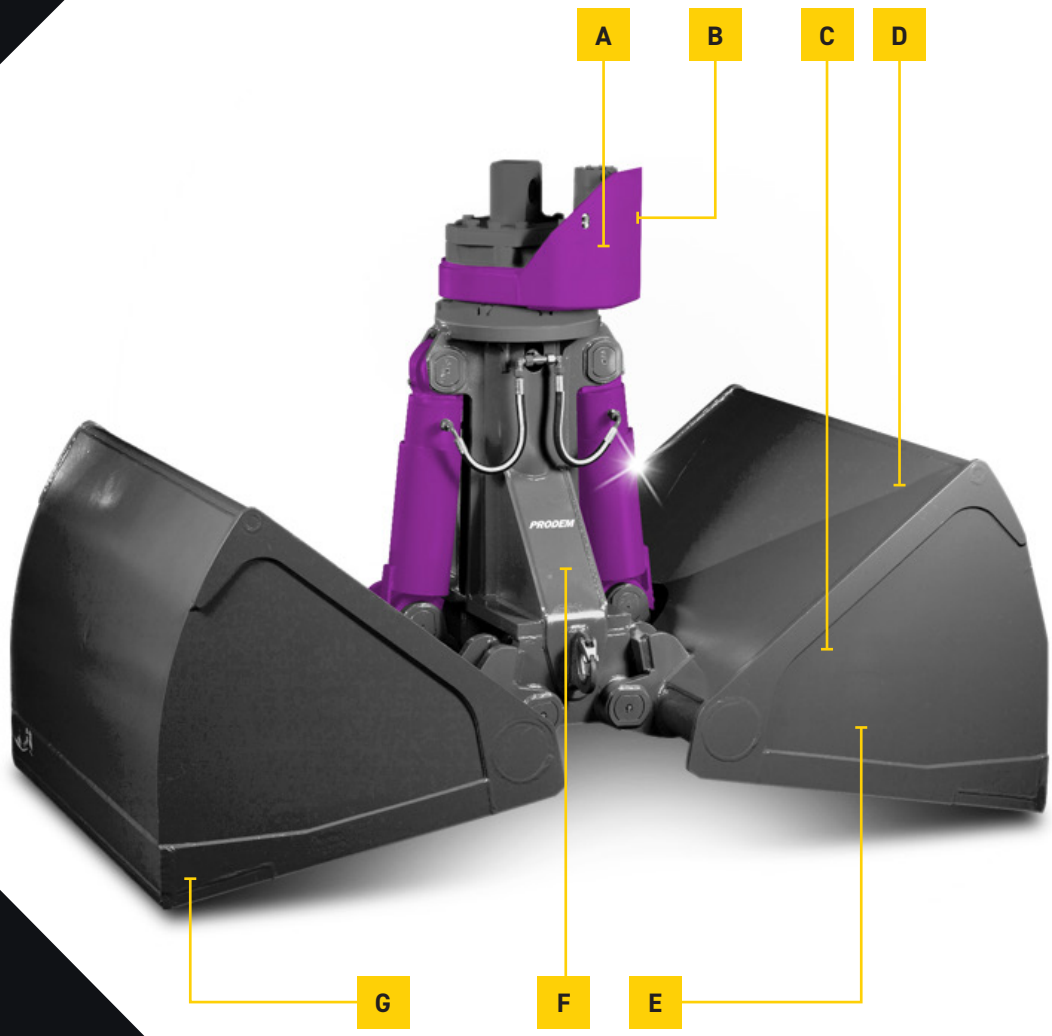

PRODEM.

Digging Clamshell Grabs

Model	Content (SAE) L	Weight (kg)	Grab Width (mm)	Grab Opening (mm)	Number of Teeth	Max Grab Capacity (t)	Excavator Weight Class (t)
DCS05-300	35	125	300	790	3	1	1-2
DCS05-400	40	135	400	790	3	1	1-2
DCS1-300	60	140	300	950	3	1	1-5
DCS1-400	80	150	400	950	3	1	1-5
DCS1-500	100	160	500	950	5	1	1-5
DCS2-270	90	250	270	1300	3	2	5-9
DCS2-300	100	255	300	1300	3	2	5-9
DCS2-400	135	270	400	1300	3	2	5-9
DCS2-500	170	285	500	1300	5	2	5-9
DCS2-600	205	300	600	1300	5	2	5-9
DCS3-300	140	570	300	1445	3	2	9-15
DCS3-400	185	585	400	1445	3	2	9-15
DCS3-500	230	610	500	1445	5	2	9-15
DCS3-600	275	625	600	1445	5	2	9-15
DCS3-700	320	640	700	1445	7	2	9-15
DCS3-800	365	660	800	1445	7	2	9-15
DCS4-300	180	675	300	1690	3	4	13-21
DCS4-400	240	720	400	1690	3	4	13-21
DCS4-500	300	750	500	1690	3	4	13-21
DCS4-600	360	780	600	1690	5	4	13-21
DCS4-700	420	855	700	1690	5	4	13-21
DCS4-800	480	885	800	1690	7	4	13-21
DCS4-900	540	915	900	1690	7	4	13-21
DCS4-1000	600	945	1000	1690	9	4	13-21
DCS5-400	340	1275	400	2005	3	6	22-30
DCS5-500	430	1325	500	2005	3	6	22-30
DCS5-600	520	1370	600	2005	5	6	22-30
DCS5-800	700	1390	800	2005	7	6	22-30
DCS5-1000	880	1465	1000	2005	9	6	22-30
DCS5-1200	970	1675	1200	2005	11	6	22-30

Featuring interchangeable shells

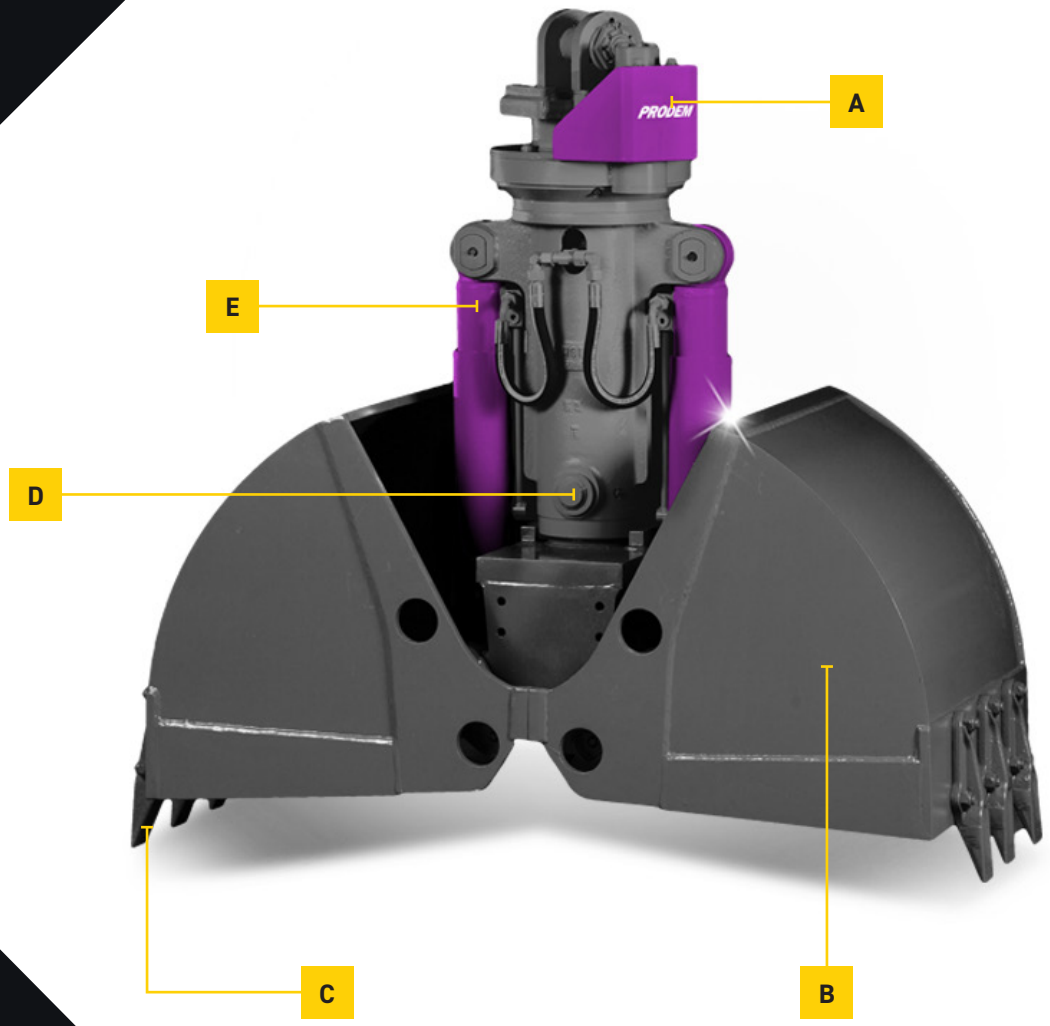

Product features

- **A** Fully protected compact rotary motor, endless hydraulic rotation with integrated pressure limitation
- **B** Extension Shafts and Clay Scrapers available
- **C** Bolt-on replaceable forged teeth
- **D** All models throughout the range have interchangeable digging shells that can be changed by 3 point quick hitch system
- **E** Ram guard offers full protection of cylinders

PRODEM.

Scrap Grabs

Model	Max Grab Capacity (t)	Max Rotation Load (t)	Material Weight Up (t/m3)	Working Pressure – Rotation (bar)	Working Pressure – Open/Close (bar)	Max. Oil Flow – Rotation (l/min)	Max. Oil Flow – Open/Close (l/min)	Excavator Weight Class (t)	Material Handler Weight Class (t)
MT3.2	2	10	2	140	350	35	90	13-20	Up to 20
MT3.6	4	15	4	140	350	35	90	16-20	20-30
MT4.6	8	15	8	140	350	35	115	20-30	30-55
MT5.6	10	26	10	140	350	30	90	30-45	55-70
MT6.6/MH	15	35	15	140	350	30	172	-	Up to 100
MT7.6/MH	15	40	15	140	350	30	197	-	Up to 220

	Capacity (l)	Weight (kg)	Grab Width (mm) Closed	Height (mm) Closed	Height (mm) Open	Opening Width (mm) Open	Rotator Connection Width F (mm)	Mounting Pin Diameter G (mm)
MT3.2-500-5	500	970	2046	2046	1676	2187	114	70
MT3.6-400-5	400	1425	1280	2134	1810	2109	114	70
MT3.6-600-5	600	1492	1371	2236	1856	2295	114	70
MT3.6-800-5	800	1566	1463	2339	1903	2483	114	70
MT4.6-400-5	400	1920	1350	2185	1790	2160	114	70
MT4.6-600-5	600	2035	1360	2270	1820	2320	114	70
MT4.6-800-5	800	2140	1540	2405	1865	2600	114	70
MT4.6-1000-5	1000	2290	1680	2515	1900	2800	114	70
MT5.7-1250-5	1250	2963	1800	2731	2153	3050	149	80
MT5.7-1500-5	1500	3131	2000	2784	2172	3200	149	80
MT5.7-3000-5	3000	3754	2360	3172	2303	3900	149	80
MT6.6-2500-5	2500	4400	2270	3335	2545	3910	200	80
MT6.6-3000-5	3000	4475	2285	3440	2580	4100	200	80
MT6.6-3500-5	3500	4665	2420	3505	2600	4220	200	80
MT7.6-3000-5	3000	7700	2600	3950	3300	4350	200	80
MT7.6-4000-5	4000	7450	4010	3325	2850	4020	200	80
MT7.6-5000-5	5000	7575	4100	3360	3050	4180	200	80
MT7.6-8000-5	8000	7865	4370	3480	3400	4660	200	80

Narrow Tines

Wide Tines

Fully Closed Tines

Half Open Tines

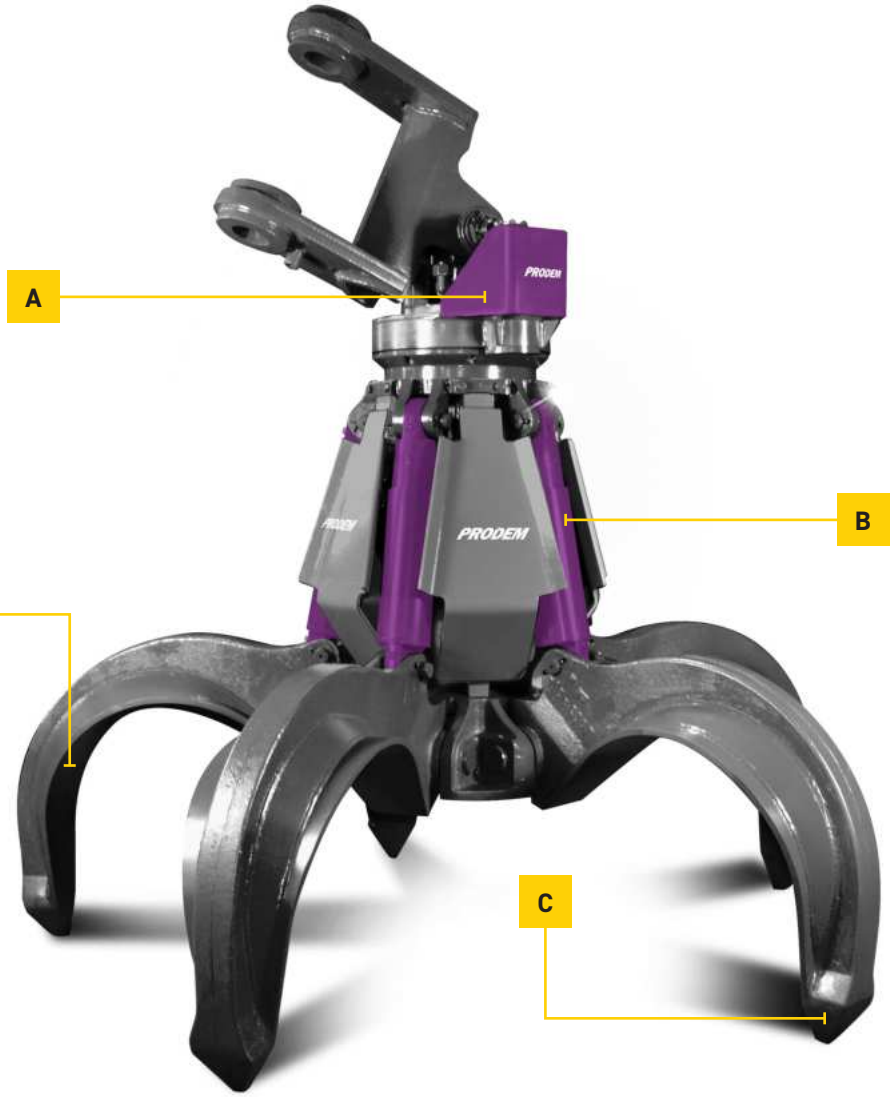

Product features

- **A** Fully protected compact rotary motor, endless hydraulic rotation with integrated pressure limitation
- **B** Full cylinder over-stroke protection
- **C** Forged manganese replaceable Tips
- **D** Shells made of high-strength fine-grain steel – 3, 4 and 5 shell versions available

PRODEM.

Timber Grabs

	TG 028-L	TG 035-L	TG 040	TG 050	TG4 500	TG4 650	TG4 800	TG4 1000	TG4.6 800	TG4.6 1000
Working Weight (kg)	185	235	455	485	965	1015	1085	1145	1400	1480
Volume (m3)	0.28	0.35	0.4	0.5	0.5	0.65	0.8	1	0.8	1
Max Grab Capacity (t)	4	4	5	5	4	4	4	4	6	6
Max Load – Rotation (t)	4	4	5	5	15	15	15	15	15	15
Max Operating Pressure – Rotation (bar)	250	250	250	250	140	140	140	140	140	140
Max Operating Pressure – Open/Close (bar)	250	250	250	250	350	350	350	350	350	350
Height – Closed (mm)	1060	1190	1355	1420	2460	2540	2710	2820	2880	2950
Height – Open (mm)	980	1115	1140	1180	2010	2050	2135	2190	2215	2265
Min. Log Diameter (mm)	90	100	150	180	150	150	200	210	50	90
Max Opening (mm)	1280	1950	1085	1145	1820	1950	2255	2445	2380	2540
Material Handler Weight Class (t)	2-7	2-7	8-14	8-14	18-25	18-25	18-25	18-25	22-35	22-35
Excavator Weight Class (t)	2-7	2-7	8-14	8-14	15-25	15-25	15-25	15-25	20-30	20-30

	TG4.6 1250	TG4.6 1500	TG4.6 1750	TG4.6 2000	TG5.6 1250	TG5.6 1500	TG5.6 1750	TG5.6 2000	TG5.6 2500
Working Weight (kg)	1530	1540	1715	1915	2200	2240	2300	2350	2470
Volume (m3)	1.25	1.5	1.75	2	1.25	1.5	1.75	2	2.5
Max Grab Capacity (t)	6	6	6	6	12	12	12	12	12
Max Load – Rotation (t)	15	15	15	15	26	26	26	26	26
Max Operating Pressure – Rotation (bar)	140	140	140	140	140	140	140	140	140
Max Operating Pressure – Open/Close (bar)	350	350	350	350	350	350	350	350	350
Height – Closed (mm)	3080	3200	3310	3435	3280	3405	3520	3630	3900
Height – Open (mm)	2310	2350	2400	2435	2480	2525	2565	2600	2695
Min. Log Diameter (mm)	110	125	150	240	100	120	140	150	170
Max Opening (mm)	2765	2990	3190	3390	2825	3055	3275	3485	4000
Material Handler Weight Class (t)	22-35	22-35	22-35	22-35	35-65	35-65	35-65	35-65	35-65
Excavator Weight Class (t)	20-30	20-30	20-30	20-30	30-45	30-45	30-45	30-45	30-45

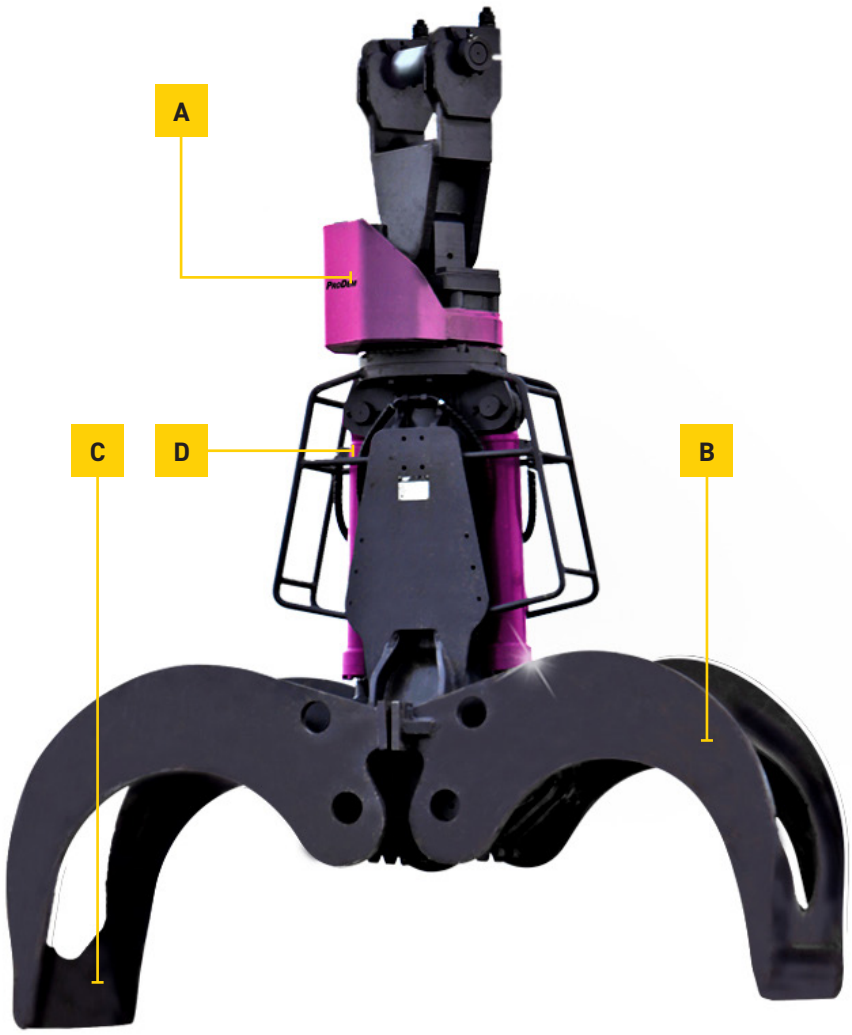

Product features

A Fully protected compact rotary motor giving endless hydraulic rotation with integrated pressure limitation

B Wear resistant quality materials used for maximum durability and minimum downtime

C Interlocking tines allow tight clamping of the log or trunk

D Heavy-duty ram and cylinder overstroke add protection

PRODEM.

Tined Timber Grabs

B Models

	PSG 150-B	PSG 450-B	PSG 452-B	PSG 602-B	PSG 802-B	PSG 1102-B	PSG 1202-B	PSG 1900-B	PSG 2700-B
Working Weight (kg)	150	350	450	800	1000	1000	1500	1800	2900
Pressure – Open/Close (bar)	300	300	320	350	350	350	350	350	350
Oil Flow – Open/Close (lpm)	25	190	190	190	190	190	190	190	190
Max Pressure – Rotation (bar)	210	210	210	210	210	210	210	210	210
Oil Flow – Rotation – l/min (mm)	10	12	15	25	25	35	35	35	40
Width (mm)	450	550	550	515	735	910	910	910	1200
Closing Force (kN)	1100	1540	1540	2050	2050	2050	2250	2250	2850
Excavator Weight Class (t)	1.2-3	5-8	6-11	10-16	12-20	16-24	17-28	25-35	30-50

7 Tine Models

	PSG 150-B 7 Tine	PSG 450-B 7 Tine	PSG 452-B 7 Tine	PSG 602-B 7 Tine	PSG 802-B 7 Tine	PSG 1102-B 7 Tine	PSG 1202-B 7 Tine	PSG 1900-B 7 Tine
Working Weight (kg)	160	400	500	920	1100	1150	1700	2050
Pressure – Open/Close (bar)	300	300	320	350	350	350	350	350
Oil Flow – Open/Close (lpm)	170	190	190	190	190	190	190	190
Max Pressure – Rotation (bar)	210	210	210	210	210	210	210	210
Oil Flow – Rotation – l/min (mm)	10	12	15	25	25	35	35	35
Width (mm)	450	735	735	800	910	910	1230	1230
Closing Force (kN)	1100	1540	1540	2050	2050	2050	2250	2250
Excavator Weight Class (t)	1.5-4	5-8	6-11	10-16	12-20	16-24	17-28	25-35

Product features

A Continuous 360° rotation

B Twin motors (PSG603 upwards)

C Heavy duty slew ring

D Tines manufactured from HARDOX

E Wide opening/large load capacity

F Heavy duty protective chassis with large diameter pins

G Extremely heavy duty shell connections

H High powered, end dampened, motionless cylinders

B Model

7 Tine Timber Grab Style

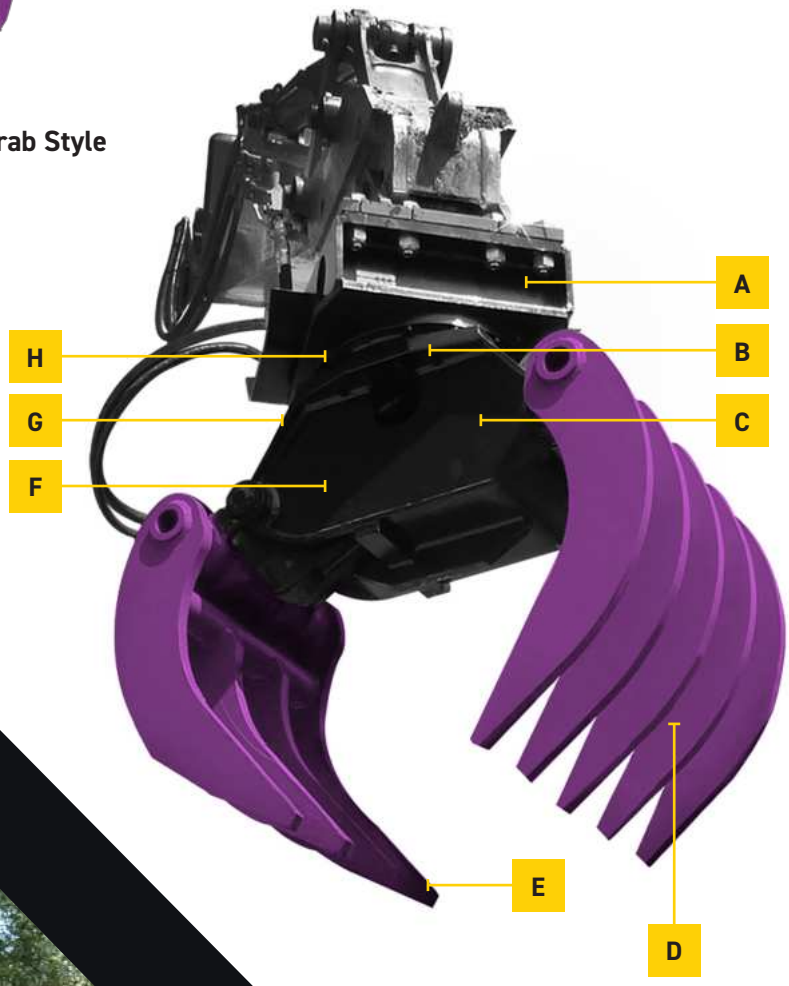

PRODEM

Forestry Tree Shears

	PTS 010	PTS 050	PTS 100	PTS 150	PTS 250	PTS 300
Excavator Weight class (t)	1.5-3	3-7	8-14	14-24	23-30	min. 30
Working Weight (kg)	140	230	420	845	1810	2400
Min Cutting Diameter (mm)	40	50	60	120	200	270
Max Cutting Diameter (mm)	150	200	300	400/450	500/600	600/700
Max Pressure (bar)	180-220	180-250	180-280	250-300	300-350	320-400
Flow Main Line (l/min)	25-40	30-80	50-120	100-180	180-250	250-300
Width (mm)	800	890	1115	1455	1640	1965
Length (mm)	775	1010	1240	1500	1860	2057
Height (mm)	420	462	552	707	892	1021
Rotating Option	×	✓	✓	✓	×	×
Rotating Option Additional Weight (kg)	120	300	350	500	-	-
Tilt Option	×	✓	✓	✓	✓	×
Tilt Option Additional Weight (kg)	-	130	300	482	Upon Request	-

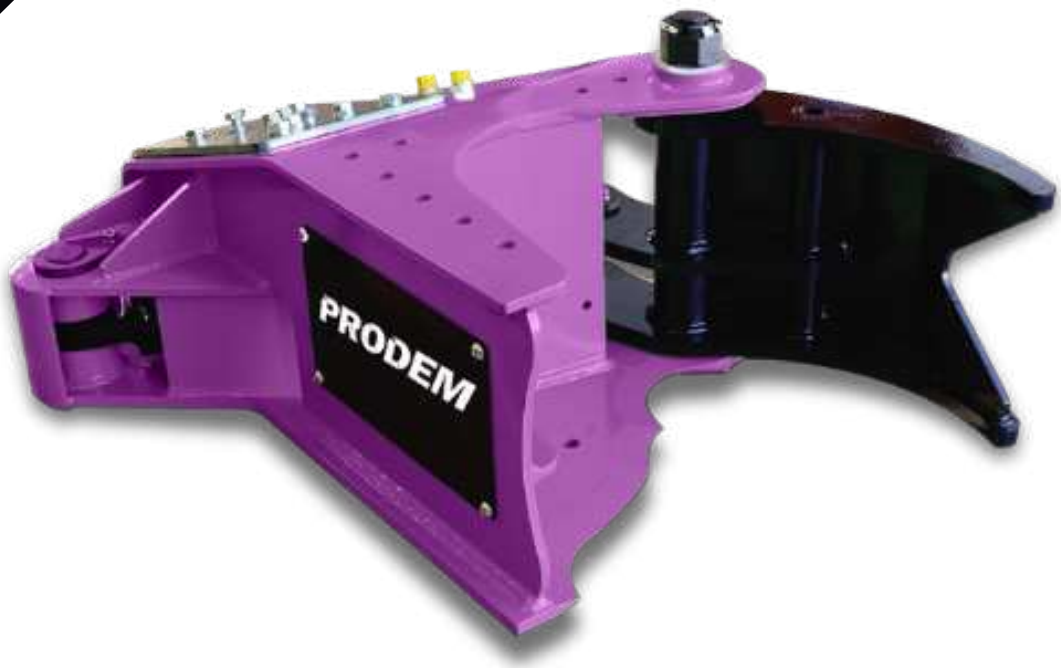

Rotation Option

Tilt Option

PRODEM.

LaBounty Mobile Shears - MSD & Legend

Model	Excavator Weight 2nd member (min – T)	Excavator weight 3rd member (min – T)	Attachment weight (kg)	Jaws Opening (mm)	Jaw Depth (mm)	Reach – 2nd member (M)
MSD 7R	3	7	500	280	250	1.8
MSD 800R	9	12	1200	380	430	2.2
MSD 1000R	10	18	2000	480	510	2.6
MSD 1500R Legend	18	30	3200	560	640	3.1
MSD 2000R Legend	22	40	4600	710	760	3.7
MSD 2250R Legend	24	45	5700	760	760	3.6
MSD 2500R Legend	30	50	6600	810	860	4.1
MSD 3000R Legend	40	70	7700	890	970	4.4
MSD 4000R Legend	45	75	8600	1020	1120	4.6
MSD 4500R Legend	50	85	9500	970	1090	4.9
MSD 7500R	75	Consult Factory	13600	1090	1140	5.3
MSD 9500R	120	Consult Factory	20700	1220	1320	6.7

Product features

A Speed Valve

B Reverse Cylinder

C Main Pivot

D Upper, Moveable Jaw

E Reversible Saber Tip

F Lower Cross Blade

G Patented Blade System

H Lower Stationary Jaw

I Shear Stick

J Rear Cylinder Connection

LABOUNTY®

OilQuick Coupler

	OQ 40/24	OQ 45-5	OQ 60-5	OQ 65	OQ 70	OQ 70/55	OQ 80	OQ 90	OQ 120
Width (mm)	240	290	340	440	450	550	590	750	870
Pin distance (mm)	300	430	480	530	600	600	670	750	925
Weight (kg)	32	85	135	170	210	230	320	630	1200
Max. number of hose couplings									
Max.	4	5	5	5	5	6	6	9	8
3/8"	2	3	2	-	-	-	-	1	-
1/2"	2	2	1	2	2	2	2	3	3
3/4"	-	-	2	3	1	2	2	1	-
1"	-	-	-	-	2	2	2	4	3
1,5"	-	-	-	-	-	-	-	-	2
Electrical coupling (option)	Yes	Yes	Yes	Yes	Yes	Yes	Yes	Yes	Yes
Excavator Weight Class (t)	1-5	5-12	8-18	14-22	15-28	18-28	25-40	40-70	70-120

Attachment Adapters

Mechanical attachment adapter

Hydraulic attachment adapter

Hydraulic Bolt-on-adapter

Pendulum adapter for attachments

Product features

A Change attachments in ten seconds!

B No external hoses to attachments

C Twin lock with OilQuick lock support

D Enables the right attachment for the job

E Maximum of up to 9 couplings

F No oil loss during change over

OILQUICK®

Hydraulic Magnets

	HMAG PRO 700	HMAG PRO 900	HMAG PRO 1200	HMAG PRO 1400
Working Weight (kg)	440	900	1550	1700
Diameter (mm)	720	960	1250	1450
Power (220 vdc kw)	3	6	10	12
Tear-off w/air gap Ømm 300 Lifting Capacity (kg)	5500	10500	15000	18000
Slabs/Blocks Lifting Capacity (kg)	2750	5250	7500	9000
Pig Iron Lifting Capacity (kg)	105	230	410	580
Scrap Lifting Capacity - grade 3A (kg)	80	200	370	530
Scrap Lifting Capacity - grade 24 (kg)	70	190	360	510
Scrap Lifting Capacity - grade 40 (kg)	40	100	190	240
Oil Flow (lpm)	min. 23	min. 37	min. 53	min. 63
Max Working Pressure (bar)	350	350	350	350

Optional extra - HMAG with teeth

Product features

- **A** Powerful hydraulic magnet generator, installation valves and high quality magnet, enclosed in robust shell
- **B** Built in automatic valves for oil flow and pressure
- Functions from one single button
- Low Maintenance
- Supplied with a two year warranty
- Fastest de-magnetization of 0.8 seconds

DYNASET
A
B
DYNASET

DYNASET

Flails

Model	Cutting Width (mm)	Number of Hammers	Number of Blades	Cuts Material (mm)	Required Oil Flow (lpm)	Working Pressure (bar)	Working Weight (kg)	Excavator Weight Class (t)
GREEN/SB 60	600	10	20	10-20	25-30	195-205	100	1.5-2
GREEN/SB 80	800	14	28	10-20	25-30	195-205	110	1.5-2
NKR/SB 60	600	-	20	30	33-37	195-205	150	2-4
NKR/SB 80	800	-	28	30	33-37	195-205	170	2-4
NKR/SB 100	1000	-	36	30	38-42	195-205	190	2-4
GKR/SB 60	600	8	-	40	33-37	195-205	185	2.5-4
GKR/SB 80	800	12	-	40	38-42	195-205	215	2.5-4
CKT/SB 80	800	12	36	50	43-47	245-255	260	4.5-5-5
CKT/SB 100	1000	16	48	50	43-47	245-255	290	4.5-5-5
PARK/SB 90	900	12	36	60	63-67	215-225	430	6-8
PARK/SB 110	1010	16	48	60	63-67	245-255	455	6-8
RA/SB 95	950	8	24	70	78-82	245-255	420	7.5-9
RA/SB 115	1150	10	30	70	78-82	245-255	450	7.5-9
RA/SB 125	125	12	36	70	78-82	245-255	500	7.5-9
LAND/SB 120	1200	12	24	100-120	115-125	275-285	780	12-20
LAND/SB 160	1600	16	32	100-120	115-125	275-285	900	12-20
LAND/SB 200	2000	20	40	100-120	115-125	290-300	1100	12-20

Product features

A Self-levelling support (up to PARK SB model)
All models with under plate for mounting bracket

B Purpose made mounting hitch

C Removable front inspection hood

D High Quality Goodyear Drive Belts

E Levelling roller

F Side skids

G Enclosed and protected Drive Belts on applicable models

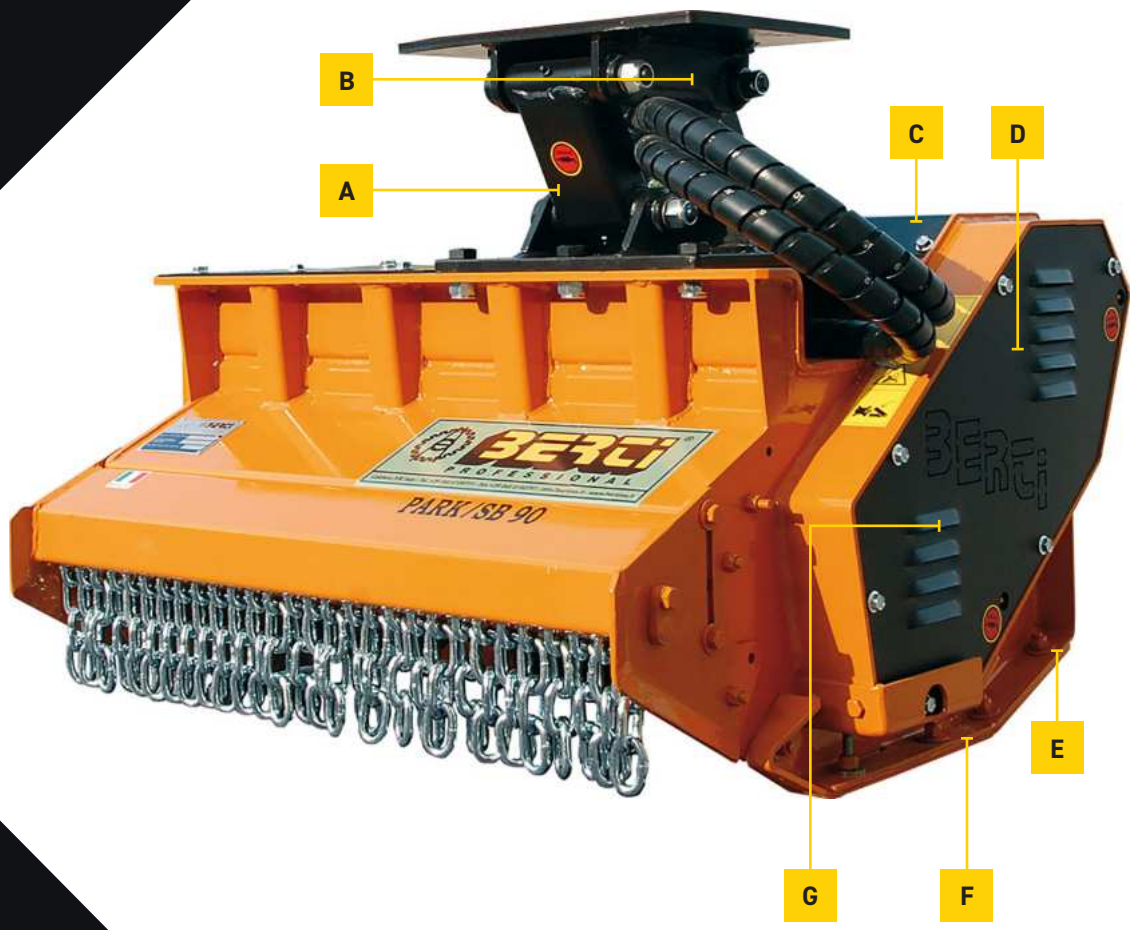
B
A
C
D
BERTI
PROFESSIONAL
PARK/SB 90
E
G
F

50 m
EFX 120

Swinging & Fixed Hammer Mulchers

Swinging Hammer Mulchers

Model	Cutting Width (mm)	Number of Hammers	Cuts Material (mm)	Required Oil Flow (lpm)	Working Pressure (bar)	Working Weight (kg)	Excavator Weight Class (t)
PARK/FM 80	800	16	100	78-82	290-300	435	6-11
PARK/FM 100	1000	18	100	78-82	290-300	475	6-11
TBM/SB 100	1000	18	150-180	115-125	275-285	740	12-16
TBM/SB 120	1200	22	150-180	115-125	275-285	825	12-16
TBM/SB 140	1400	26	150-180	115-125	275-285	910	12-16
ECF MD/SB 120	1200	20	250	130-140	290-300	1140	15-20
ECF MD/SB 140	1400	24	250	130-140	290-300	1245	15-20
ECF/SB 120	1200	20	350	150-170	290-300	1470	18-30
ECF/SB 140	1400	24	350	150-170	290-300	1595	18-30
ECF/SB 160	1600	28	350	150-170	290-300	1715	18-30

Fixed Hammer Mulchers

Model	Cutting Width (mm)	Number of Hammers	Cuts Material (mm)	Required Oil Flow (lpm)	Working Pressure (bar)	Working Weight (kg)	Excavator Weight Class (t)
PARK/FX 100	1000	37	120	78-82	290-300	525	7-11
TFX/SB 100	1000	24	180-200	115-125	275-285	765	11-16
TFX/SB 120	1200	30	180-200	115-125	275-285	860	11-16
TFX/SB 140	1400	36	180-200	115-125	275-285	950	11-16
EFX MD/SB 120	1200	30	300	130-140	290-300	1155	15-20
EFX MD/SB 140	1400	36	300	130-140	290-300	1260	15-20
EFX/SB 120	1200	30	400	190-210	290-300	1430	20-35
EFX/SB 140	1400	36	400	190-210	290-300	1550	20-35
EFX/SB 160	1600	42	400	190-210	290-300	1670	20-35

Product features

A Side skids with replaceable wearing undershoes

B Made to measure hitch

C Protective cover for motor (behind the hoses)

D Hydraulic piston motor with drainage line (models vary)

E Transmission belts – high performance v-belts

F Fixed teeth rotor

G Replaceable fixed or swinging hammers (models vary)

Swinging Hammer Mulcher

Fixed Hammer Mulcher

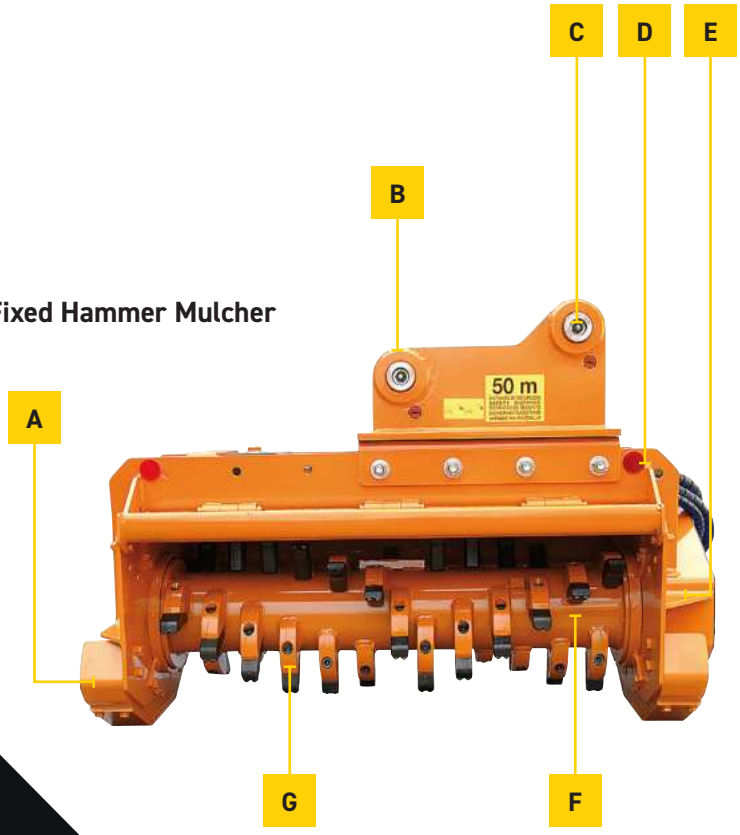

Excavator Augers

Also available for Skidsteer Loaders

	1200	X1500	X2000	X2500	3000 MAX	3500 MAX	4500 MAX
Oil Pressure Range (bar)	30-185	70-205	70-240	70-240	80-240	80-240	80-240
Torque Range (nm)	89-1, 164	511-1496	639-2190	830-2847	959-2877	1205-3614	1500-4499
Oil Flow Range (lpm)	15-32	20-45	25-57	27-65	27-75	40-85	50-95
Hub Options	50mm Round Stihl	65mm Round	65mm Round	65mm Round	65mm Round	65mm Round	65mm Round (STD) 57mm Square 2" Hex
Weight (kg)	35	46	47	48	71	73	75
Hitch Options	Single Pin Hitch	Single Pin Hitch / Double Pin Hitch / Cradle Hitch					
Auger Range	S1/S2	S4	S4	S4	S4	S4	S4
Rec. Drilling Diameter Range (mm)	100-300	100-400	100-450	100-500	100-600	100-750	100-900
Excavator Weight Class (kg)	0.7-1	1.5-3	1.5-3	1.5-3	3-4	3.5-4.5	3-5

	5500 MAX	7000 MAX	8000 MAX	10000	12000 MAX	15000 MAX	20000 MAX
Oil Pressure Range (bar)	80-260	80-260	80-240	80-260	80-240	80-240	160-240
Torque Range (nm)	685-5477	2133-6931	2717-8152	3281-10662	3998-11995	5024-15071	13043-19564
Oil Flow Range (lpm)	40-115	60-135	70-150	70-150	80-170	80-170	80-170
Hub Options	75mm Square	75mm Square	75mm Square	75mm Square	75mm Square	75mm Square	75mm Square
Weight (kg)	108	112	116	162	172	173	268
Hitch Options	Hitch Options	Single Pin Hitch / Double Pin Hitch / Cradle Hitch					
Auger Range	S5	S5	S5	S6	S6	S6	S6
Rec. Drilling Diameter Range (mm)	150-750	150-900	150-1200	150-900	150-1000	150-1200	150-1200
Excavator Weight Class (kg)	4.5-6	5-8	5-8	8-11	11-15	11-15	12-22

Product features

A Drive shaft extensions are available to obtain deeper excavations

B Range of heavy duty flights from 100mm to 1500mm diameter

C Heavy duty tungsten or earth teeth available for all augers

D Shock lock replaceable wear parts

E Shallow pitch auger flights for maximum soil removal

F Innovative design with non-dislodgement shafts

G Drive motors to suit 0.7 - 45t excavators

Auger Drive Units
& Flights available
for machines
up to 50 Ton

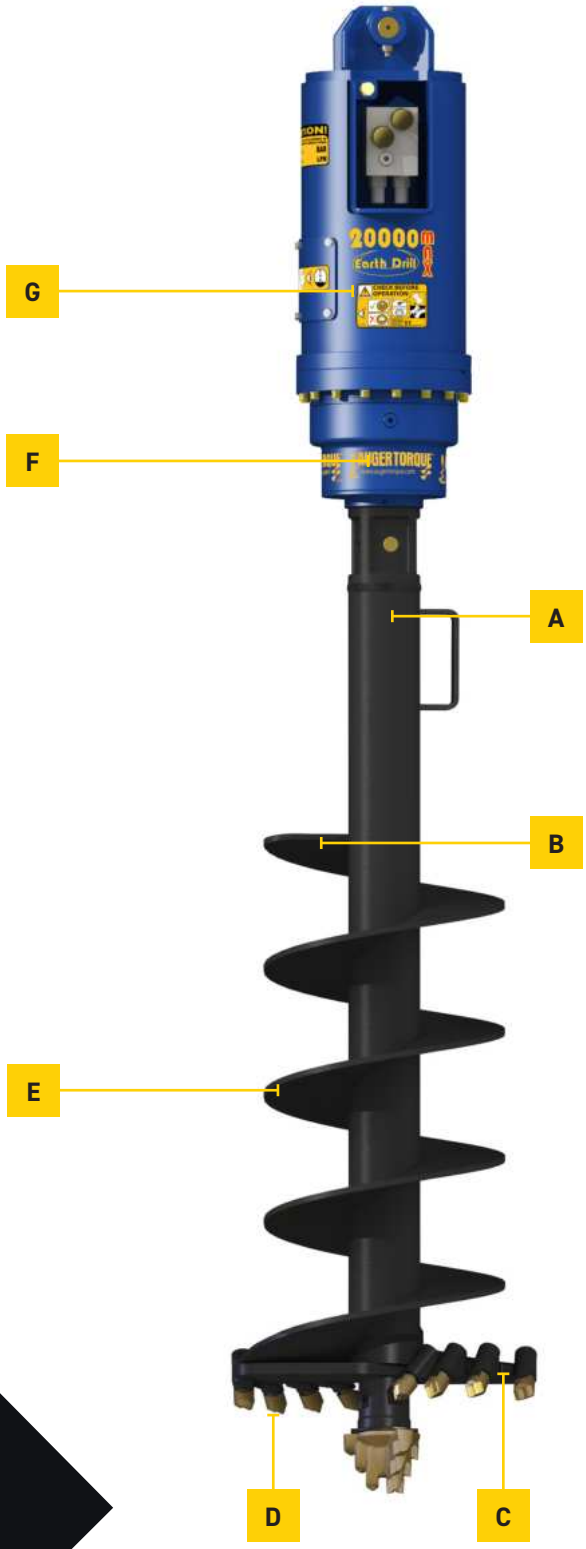

AUGERTORQUE
EARTHMOVING ATTACHMENTS

bph Attachments

sales@bph-uk.com

bphattachments.com

SOUTH EAST
HEAD OFFICE

Northwood, Goosegreen Lane,
Ashington, West Sussex
RH20 2LW

0345 017 6972
sales@bph-uk.com

LONDON
DEPOT

Unit 3 Kynoch Road,
Eley Industrial Estate,
Edmonton, London N18 3AT

0203 988 2255
london@bph-uk.com

SOUTH WEST
DEPOT

Edford Garage,
Edford Lane,
Holcombe BA3 5HH

01761 239213
southwest@bph-uk.com

MIDLANDS / NORTH
DEPOT

Samson Road, Hermitage
Industrial Estate, Coalville,
Leicestershire LE67 3FP

01530 553 788
midlands@bph-uk.com